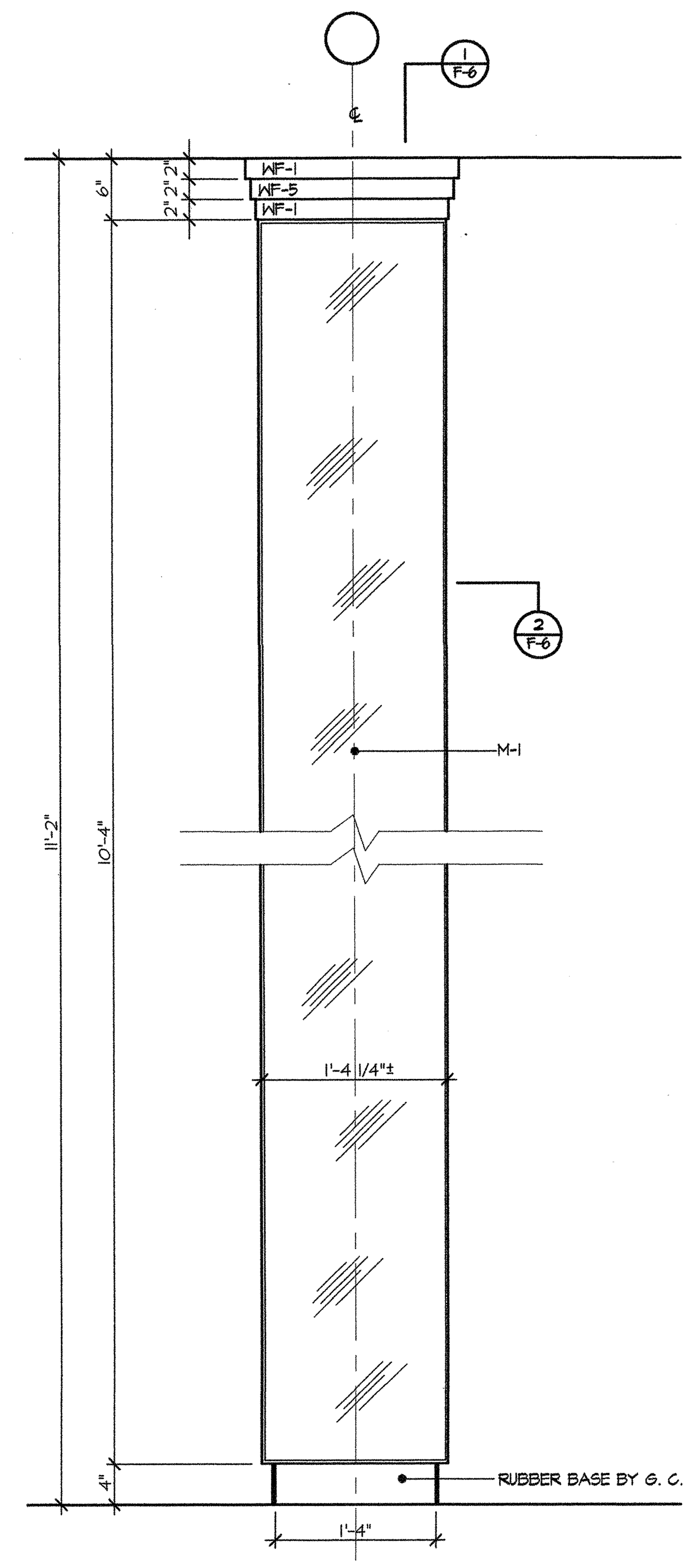

A / F-6 TYPICAL ELEVATION
SCALE : 1"=1'-0"

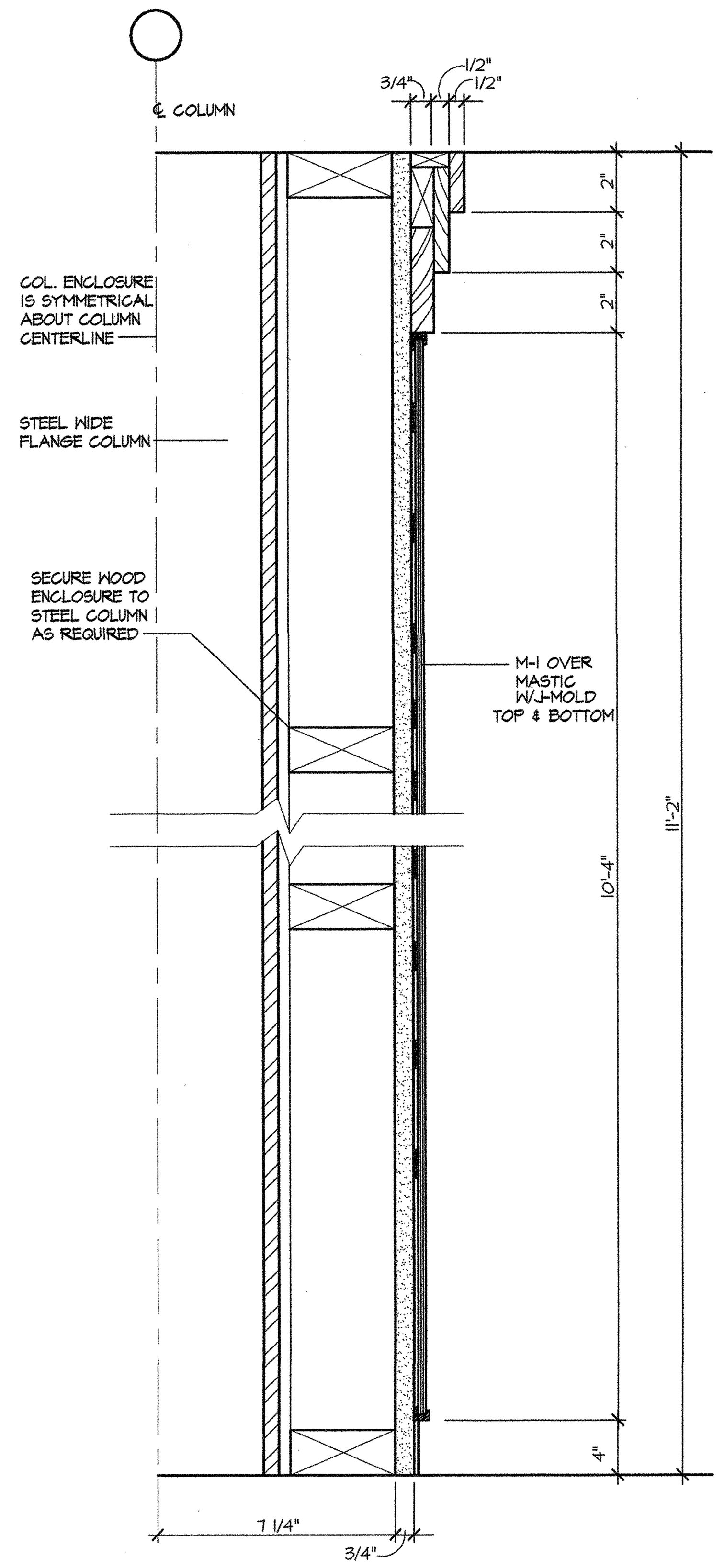

1 / F-6 SECTION
SCALE : 3"=1'-0"

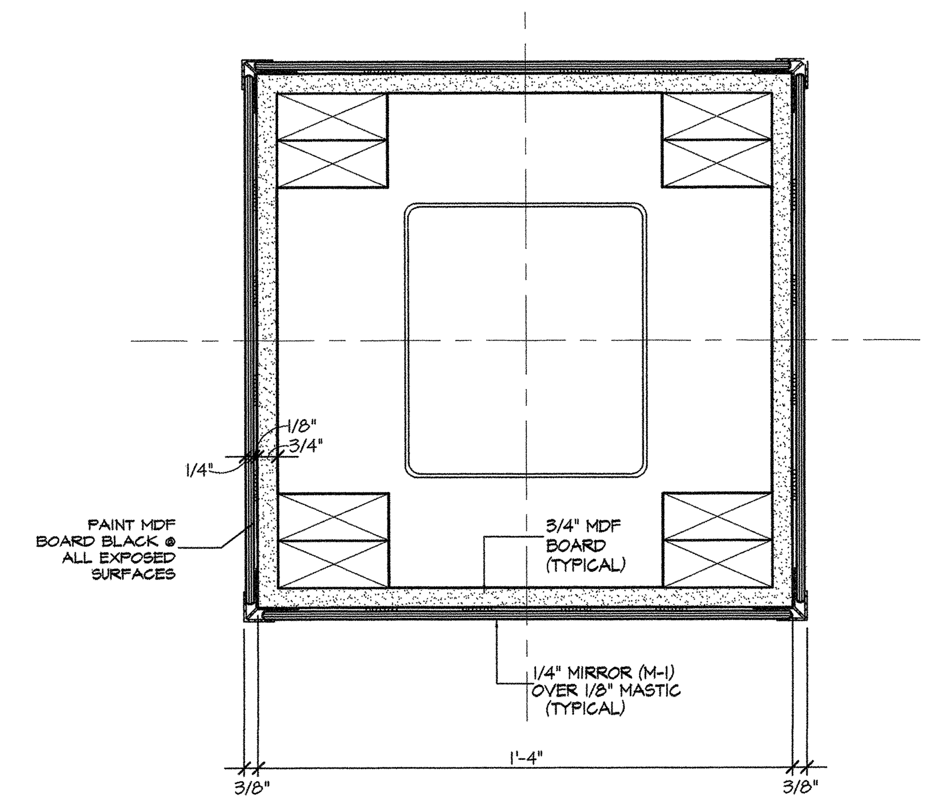

2 / F-6 SECTION
SCALE : 3"=1'-0"

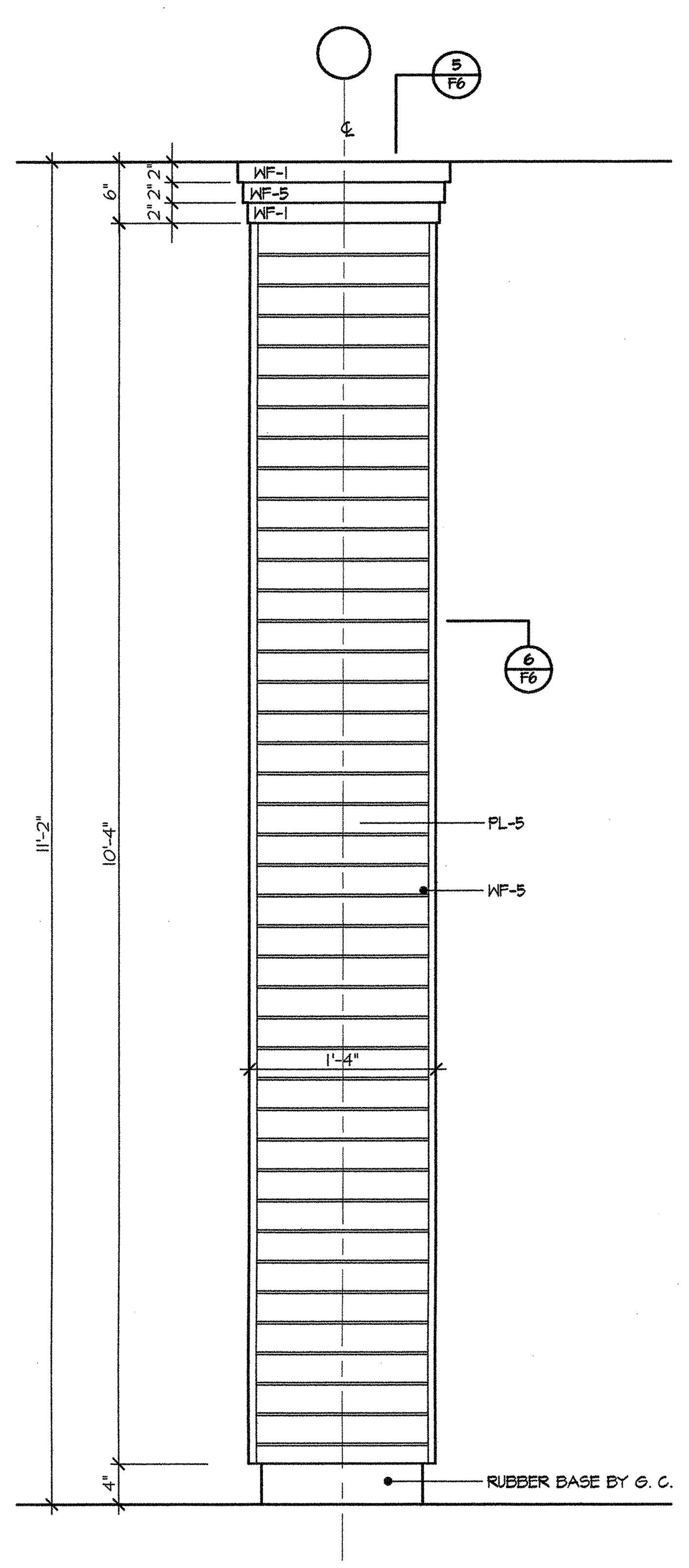

C / F-6 TYPICAL ELEVATION
SCALE : 1"=1'-0"

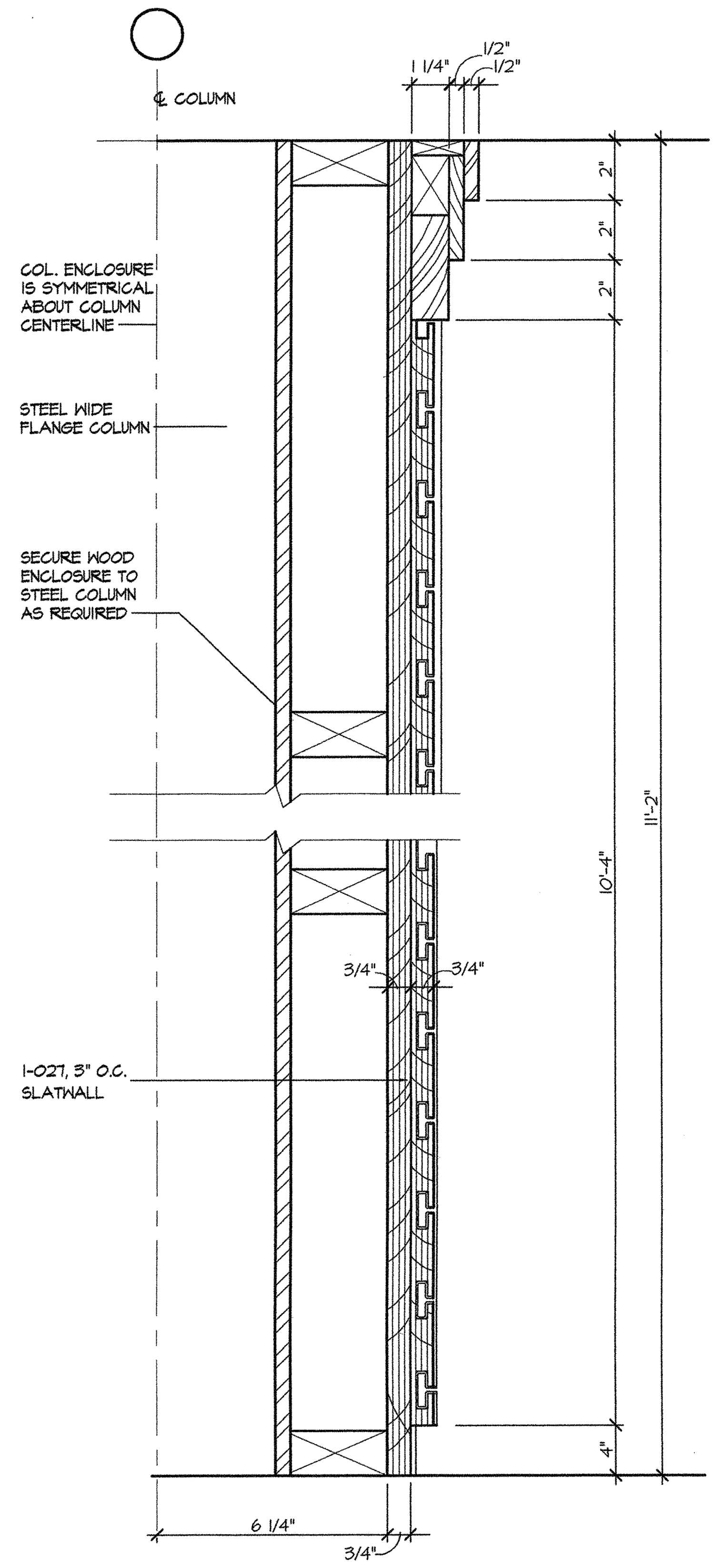

5 / F-6 SECTION
SCALE : 3"=1'-0"

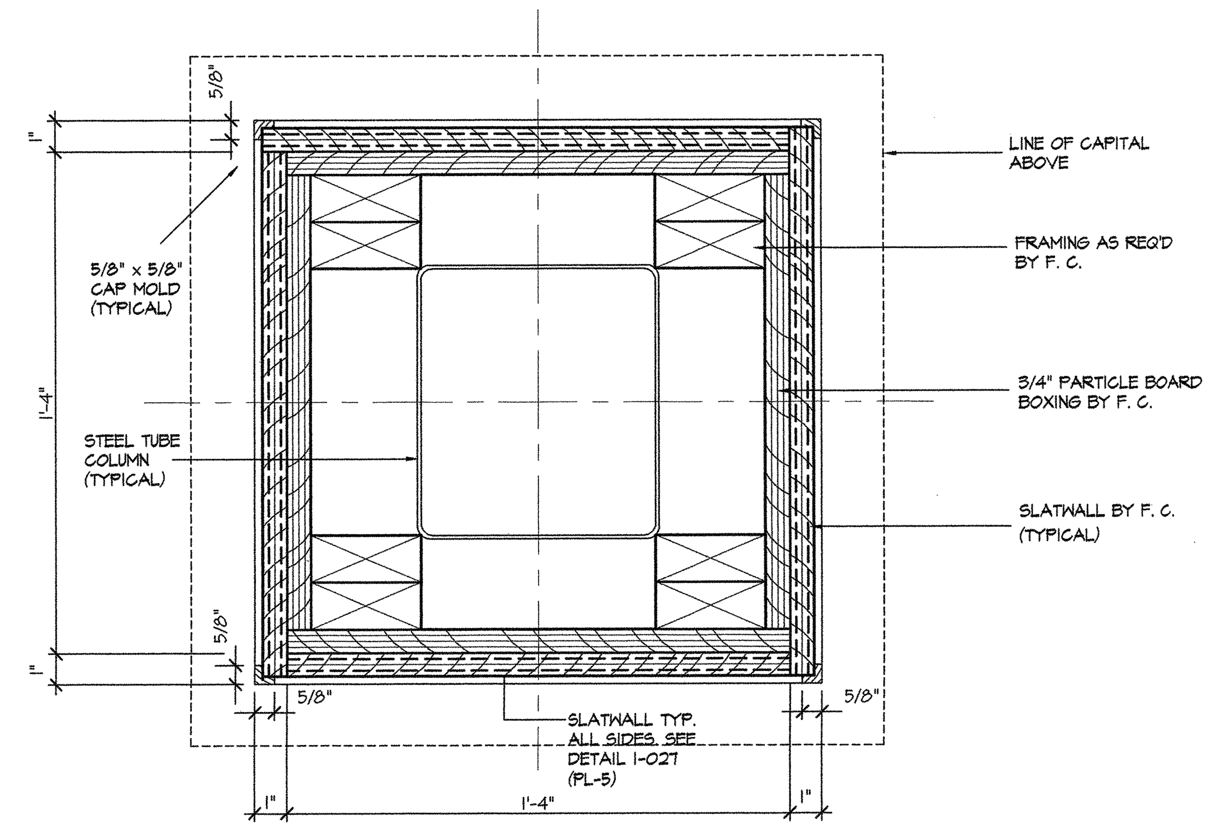

4 / F-6 SECTION
SCALE : 3"=1'-0"

REGISTERED ARCHITECT · DENNIS C. STANKE · 16225 · STATE OF TEXAS

Expiration: 7/31/99
Affixed: 2/17/99

RPDG
RETAIL PLANNING DESIGN GROUP
ARCHITECTURE • INTERIOR PLANNING & DESIGN • CONSTRUCTION ADMINISTRATION FOR BELK STORES
2801 WEST TYVOLA ROAD • CHARLOTTE, NC • 28217-4500 • (704) 357-1064 • FAX (704) 357-8531

CONSULTANTS

PROJECT
BELK
CROSSROADS MALL
GREENVILLE, TX
NEW INSTALLATION

SHEET TITLE
COLUMN ENCLOSURE DETAILS

GROUP	JORDAHL
JOB CAPTAIN	J. FURR
DRAWN BY	J. FURR
STORE NUMBER	1 2 4

REVISED	BY	REVISED	BY	REVISED	BY	REVISED	BY
ARCHITECTURAL ISSUE DATE		2-5-99		INTERIOR PLNG. ISSUE DATE		2-5-99	

INTERIOR PLANNING SHEET NUMBER
F-6
OF SHEETS

ARCHITECTURAL SHEET NUMBER
A-19
OF SHEETS

H:\124grnTX99\PLNG\124-1f-6 Mon Feb 08 17:30:32 1999 J. WITHERSPOON, ARCH. DEPT. 015/A201 X-3410