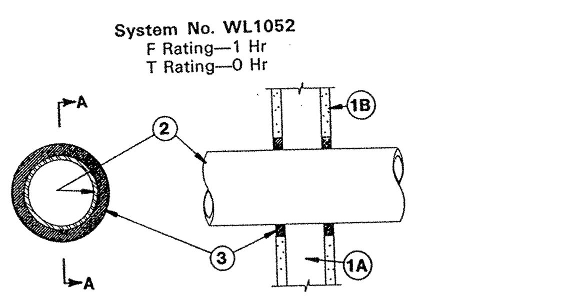

1. **Wall Assembly**— The fire-rated gypsum wallboard/stud wall assembly shall be constructed of the materials and in the manner specified in the individual U300 or U400 Series Wall and Partition Designs in the UL Fire Resistance Directory and shall include the following construction features:
   A. **Studs**—Wall framing may consist of either wood studs or steel channel studs. Wood studs to consist of nom 2 by 4 in. lumber spaced 16 in. OC. Steel studs to be min 2-1/2 in. wide and spaced max 24 in. OC.
   B. **Wallboard, Gypsum***—Two layers of 5/8 in. thick gypsum wallboard, as specified in the individual Wall and Partition Design. Max diam of opening is 5-5/8 in.
2. **Through Penetrants**—One metallic pipe, conduit or tubing to be centered within the firestop system. Pipe, conduit or tubing to be rigidly supported on both sides of wall assembly. The following types and sizes of metallic pipes, conduits or tubing may be used:
   A. **Steel Pipe**—Nom 4 in. diam (or smaller) Schedule 40 (or heavier) steel pipe.
   B. **Conduit**—Nom 4 in. diam (or smaller) electrical metallic tubing or steel conduit.
   C. **Copper Tubing**—Nom 4 in. diam (or smaller) Type L (or heavier) copper tubing.
   D. **Copper Pipe**—Nom 4 in. diam (or smaller) Regular (or heavier) copper pipe.
3. **Fill, Void or Cavity Material*—Sealant**—Min 5/8 in. thickness of fill material applied within the annulus, flush with both surfaces of wall.
   Hilti Construction Chemicals, Inc.—FS601 Sealant

*Bearing the UL Classification Marking

12/A-13 FIRE BLOCKING DETAIL
N.T.S.

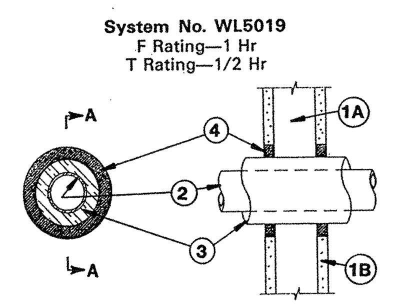

1. **Wall Assembly**—The fire-rated gypsum wallboard/stud wall assembly shall be constructed of the materials and in the manner specified in the individual U300 or U400 Series Wall and Partition Designs in the UL Fire Resistance Directory and shall include the following construction features:
   A. **Studs**—Wall framing may consist of either wood studs or steel channel studs. Wood studs to consist of nom 2 by 4 in. lumber spaced 16 in. OC. Steel studs to be min 2-1/2 in. wide and spaced max 24 in. OC.
   B. **Wallboard, Gypsum***—One layer of 5/8 in. thick gypsum wallboard, as specified in the individual Wall and Partition Design. Max diam of opening is 5-1/8 in.
2. **Through Penetrants**—One metallic pipe, conduit or tubing to be centered within the firestop system. Pipe, conduit or tubing to be rigidly supported on both sides of wall assembly. The following types and sizes of metallic pipes, conduits or tubing may be used:
   A. **Steel Pipe**—Nom 2 in. diam (or smaller) Schedule 40 (or heavier) steel pipe.
   B. **Conduit**—Nom 2 in. diam (or smaller) electrical metallic tubing or steel conduit.
   C. **Copper Tubing**—Nom 2 in. diam (or smaller) Type L (or heavier) copper tubing.
   D. **Copper Pipe**—Nom 2 in. diam (or smaller) Regular (or heavier) copper pipe.
3. **Pipe Covering***—Nom 1 in. thick hollow cylindrical heavy density (min 3.5 pcf) glass fiber units jacketed on the outside with an all service jacket. Longitudinal joints sealed with metal fasteners or factory-applied self-sealing lap tape. Transverse joints secured with metal fasteners or with butt tape supplied with the product. A nom annular space of 1/2 in. is required within the firestop system.
   See **Pipe and Equipment Covering—Materials** (BRGU) category in the Building Material Directory for the names of manufacturers. Any pipe covering material meeting the above specifications and bearing the UL Classification Marking with a Flame Spread Index of 25 or less and a Smoke Developed Index of 50 or less may be used.
4. **Fill, Void or Cavity Material*—Sealant**—Min 5/8 in. thickness of fill material applied within the annulus, flush with both surfaces of wall.
   Hilti Construction Chemicals, Inc.—FS611A Sealant

*Bearing the UL Classification Marking

9/A-13 FIRE BLOCKING DETAIL
N.T.S.

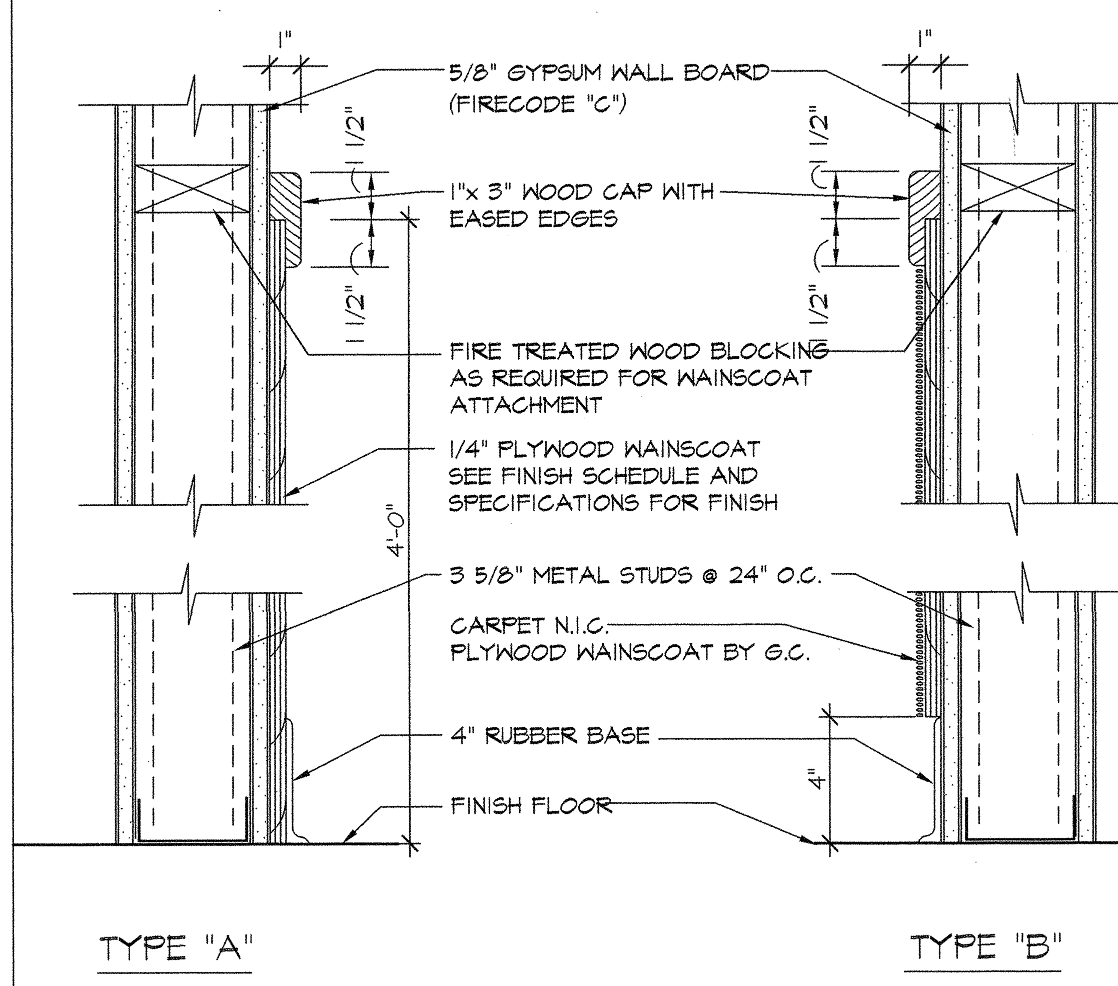

6/A-13 WAINSCOT DETAIL
3" = 1'- 0"

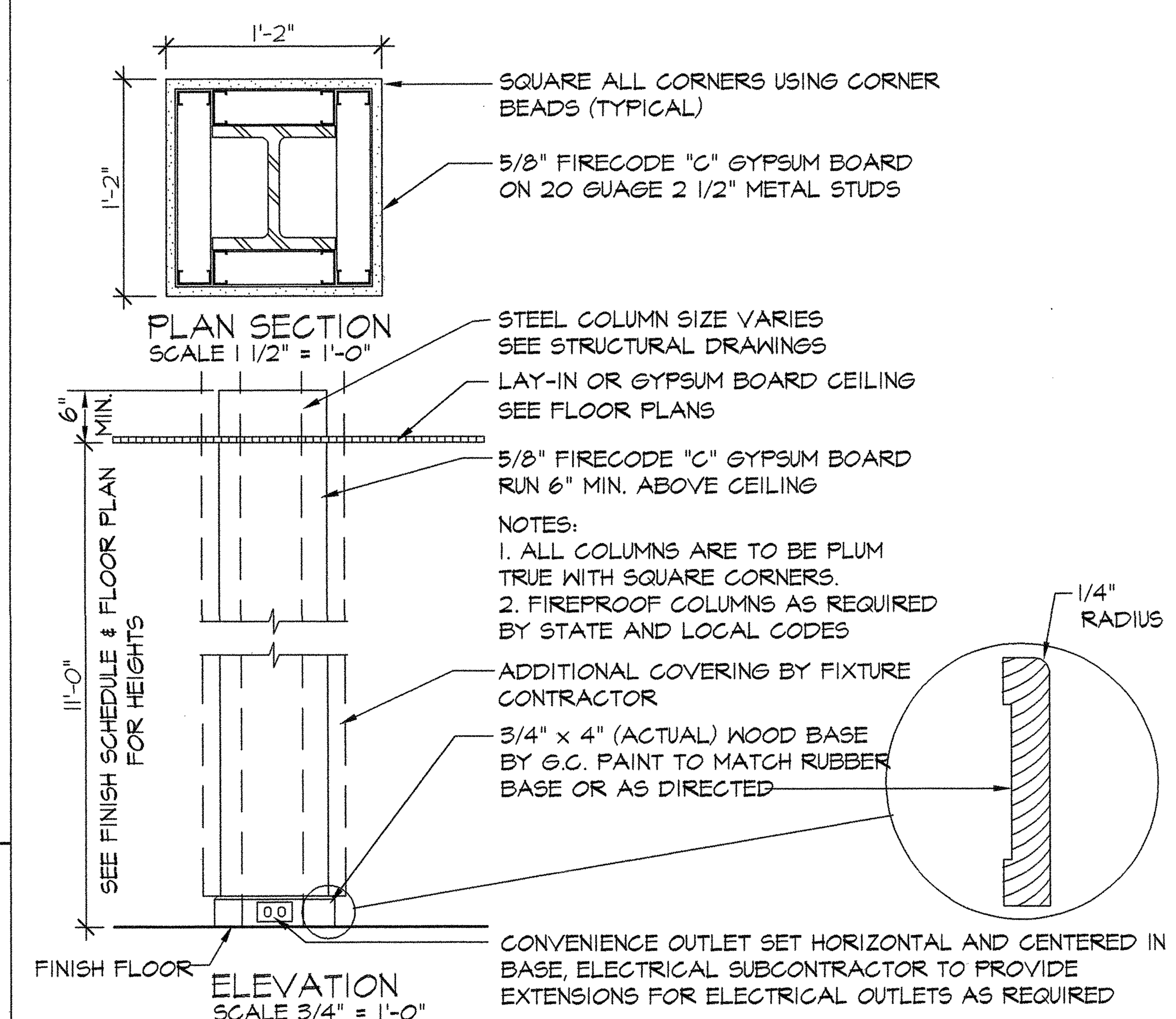

3/A-13 TYPICAL COLUMN DETAIL

NOTE: ALL COLUMN COVERS BY BELK

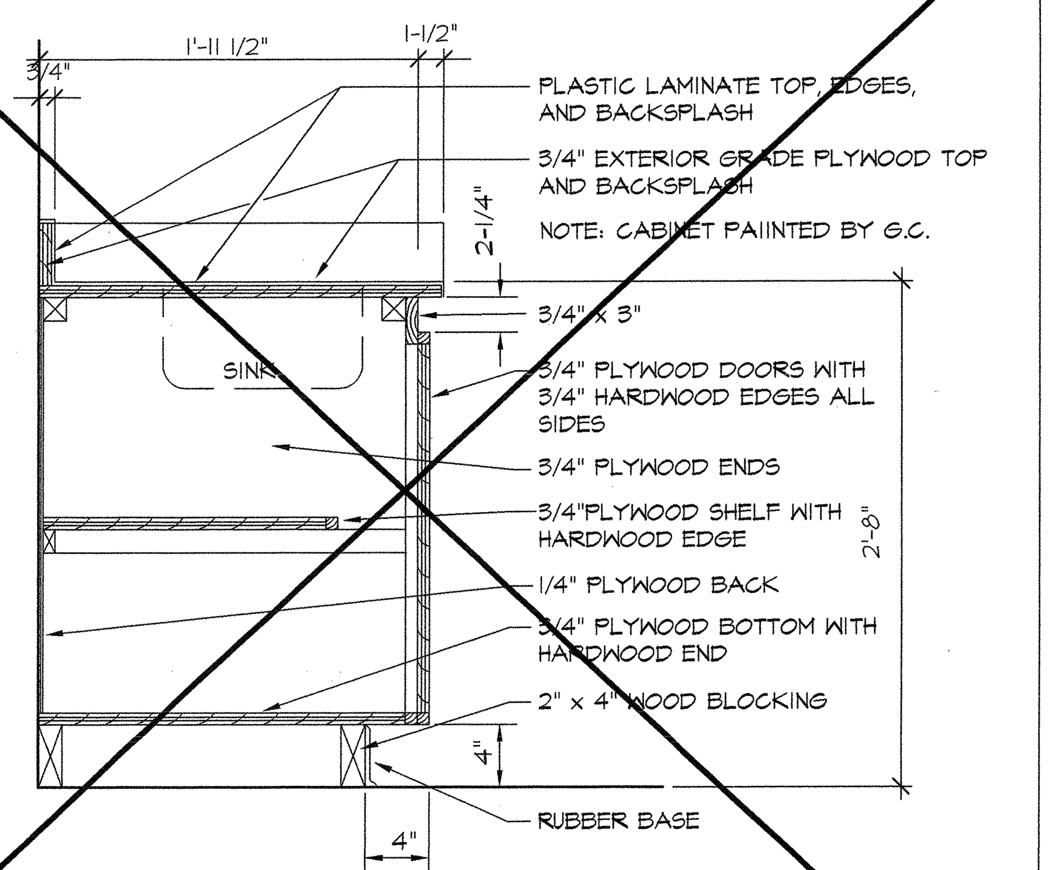

11/A-13 SECTION SINK CABINET
SCALE 1-1/2" = 1'-0"

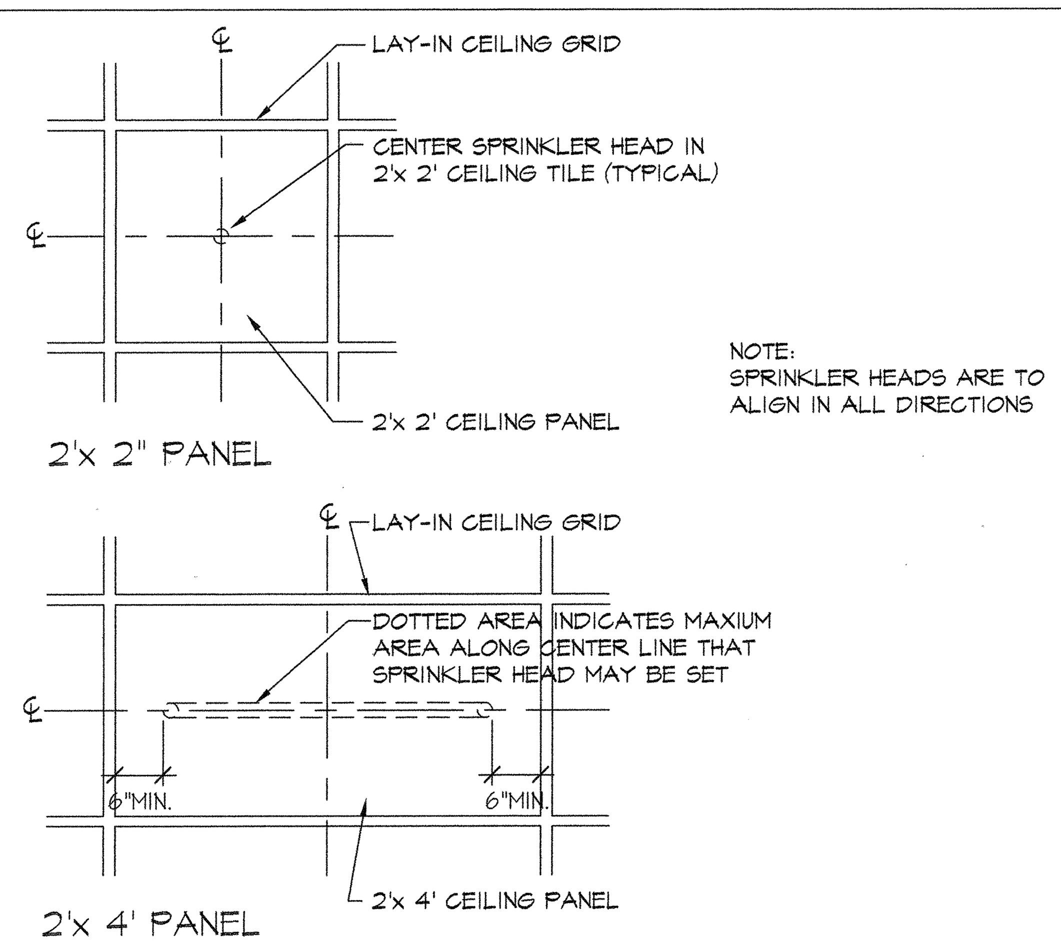

8/A-13 SPRINKLER HEAD LOCATION LAY-IN CEILING
NO SCALE

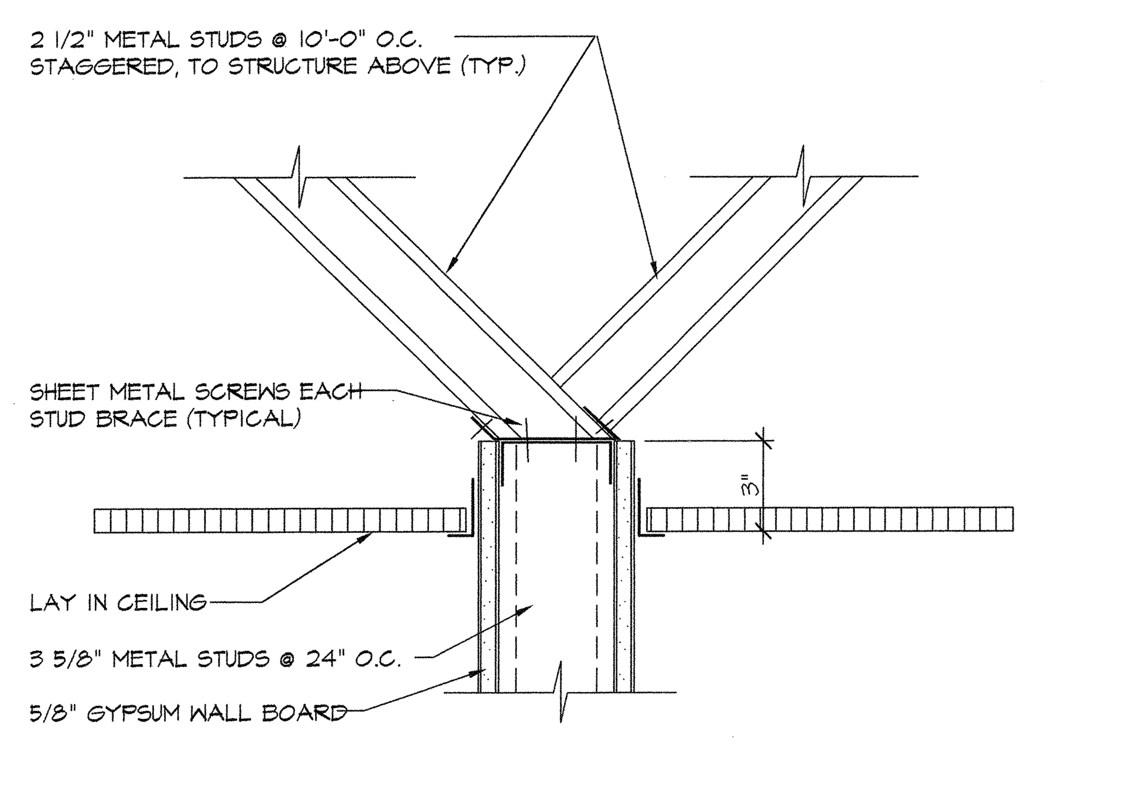

5/A-13 DETAIL WALL SUPPORT
SCALE 3" = 1'- 0"

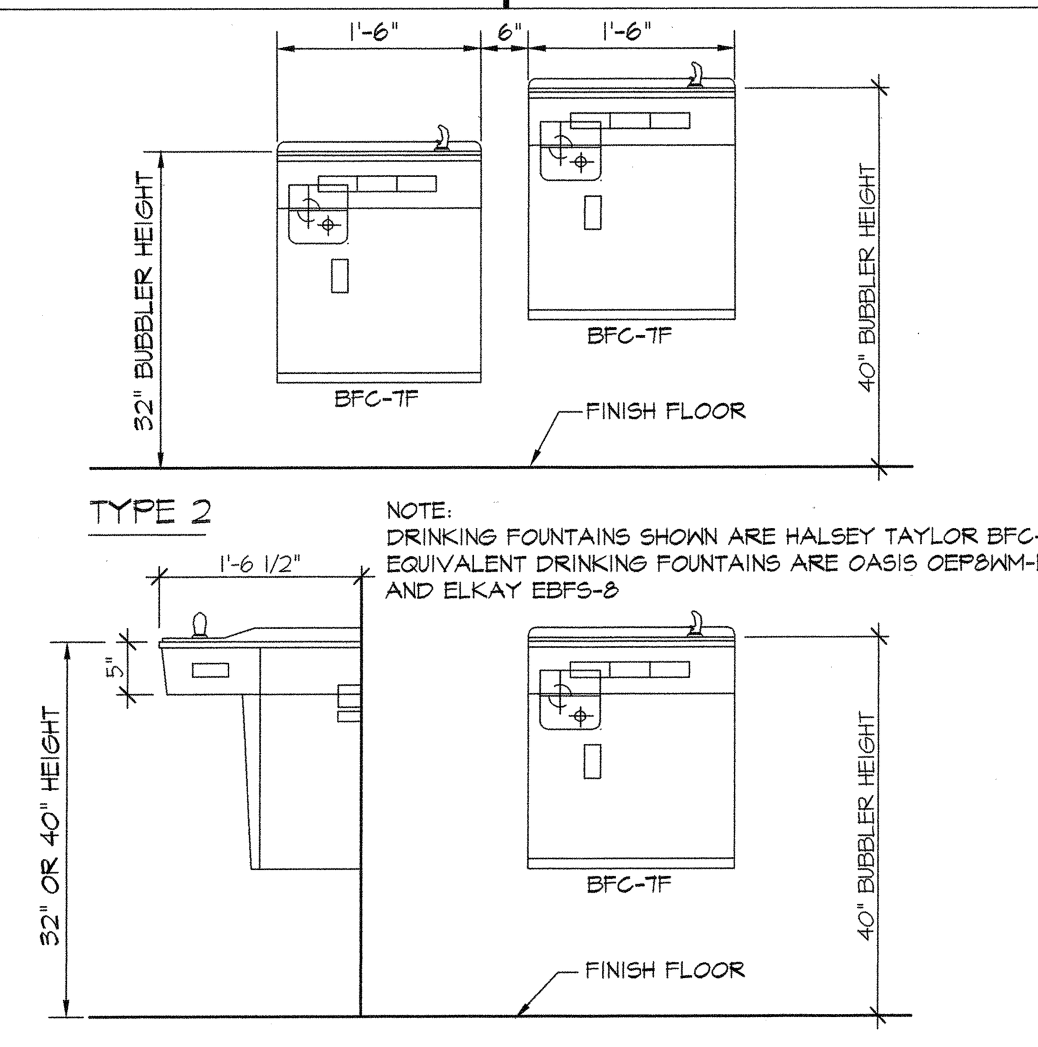

2/A-13 DETAIL DRINKING FOUNTAIN
NO SCALE

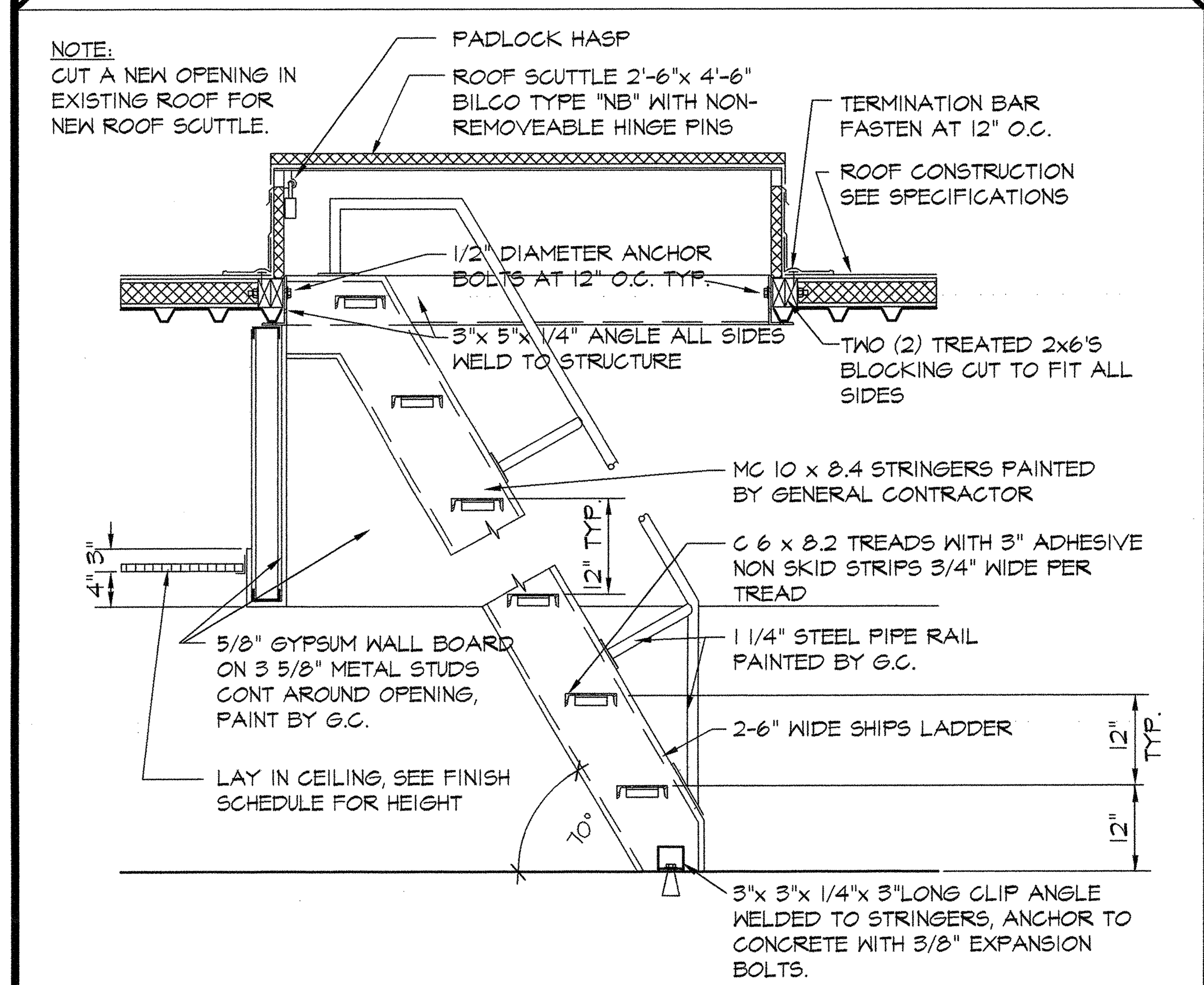

10/A-13 SECTION SHIPS LADDER & ROOF SCUTTLE
NO SCALE

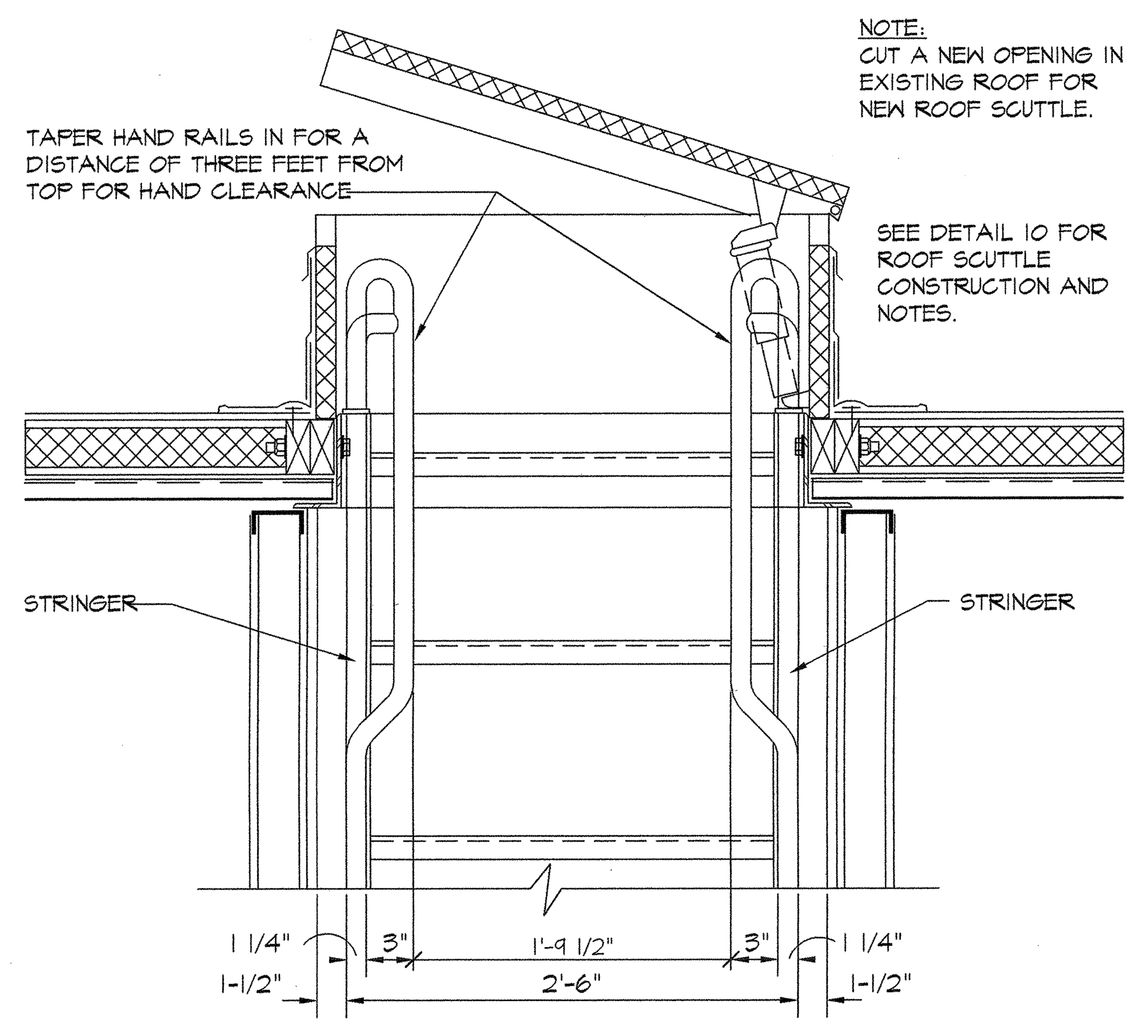

7/A-13 SECTION SHIPS LADDER & ROOF SCUTTLE
SCALE 1-1/2" = 1'-0"

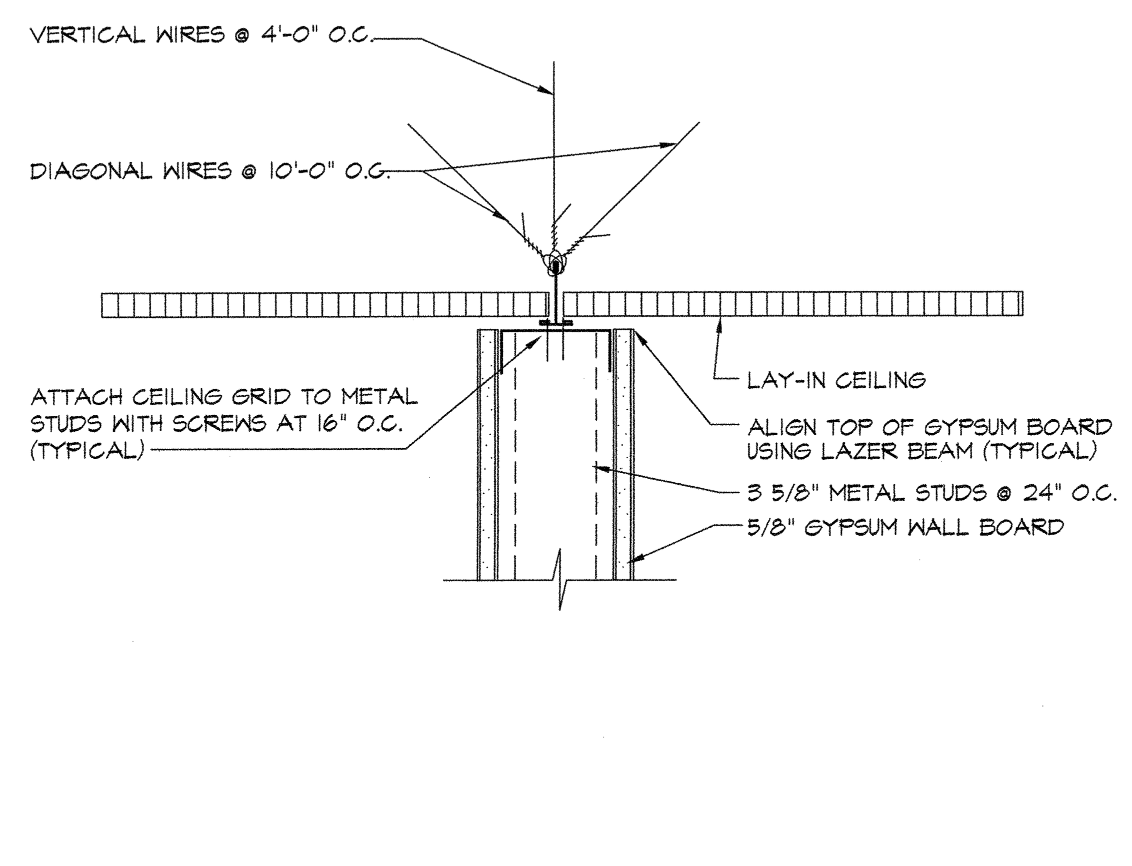

4/A-13 DETAIL WALL SUPPORT @ CEILING
SCALE 3" = 1'- 0"

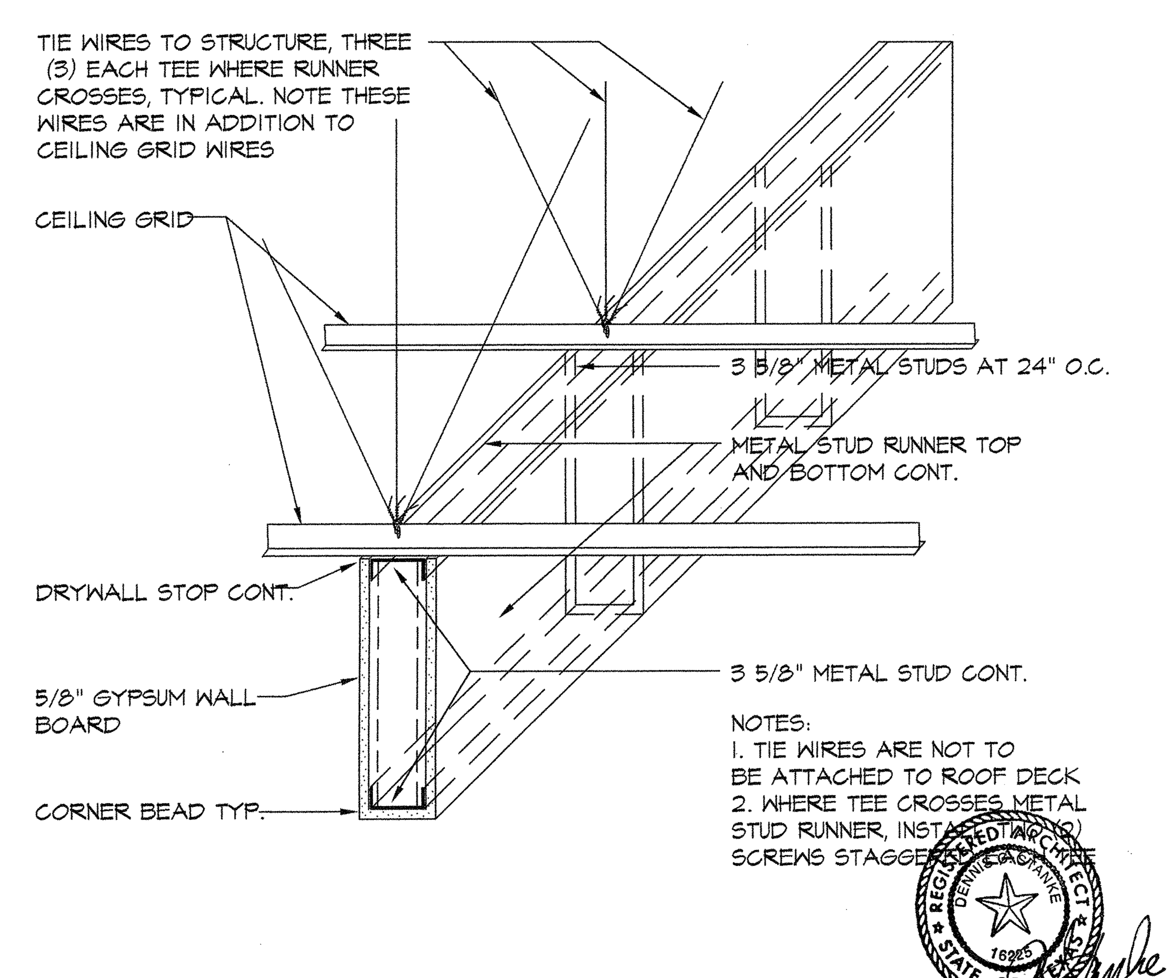

1/A-13 DETAIL AT CURTAIN WALL
NO SCALE

Expiration: 7/31/99
Affixed: 2/17/99

REVISED	BY	REVISED	BY	REVISED	BY	REVISED	BY
△		△		△		△	
△		△		△		△	
△		△		△		△	

ARCHITECTURAL ISSUE DATE 2-5-99
INTERIOR PLNG. ISSUE DATE 2-5-99

GROUP
JOB CAPTAIN J. WITHERSPOON
DRAWN BY J. WITHERSPOON
STORE NUMBER 1 2 4

SHEET TITLE
MISCELLANEOUS DETAILS

PROJECT
BELK
CROSSROADS MALL
GREENVILLE, TX
NEW INSTALLATION

CONSULTANTS

RPDG
RETAIL PLANNING DESIGN GROUP
ARCHITECTURE • INTERIOR PLANNING & DESIGN • CONSTRUCTION ADMINISTRATION FOR BELK STORES
2801 WEST TYVOLA ROAD • CHARLOTTE, NC • 28217-4500 • (704) 357-1064 • FAX (704) 357-8531

INTERIOR PLANNING SHEET NUMBER
OF SHEETS
ARCHITECTURAL SHEET NUMBER
A-13
OF SHEETS