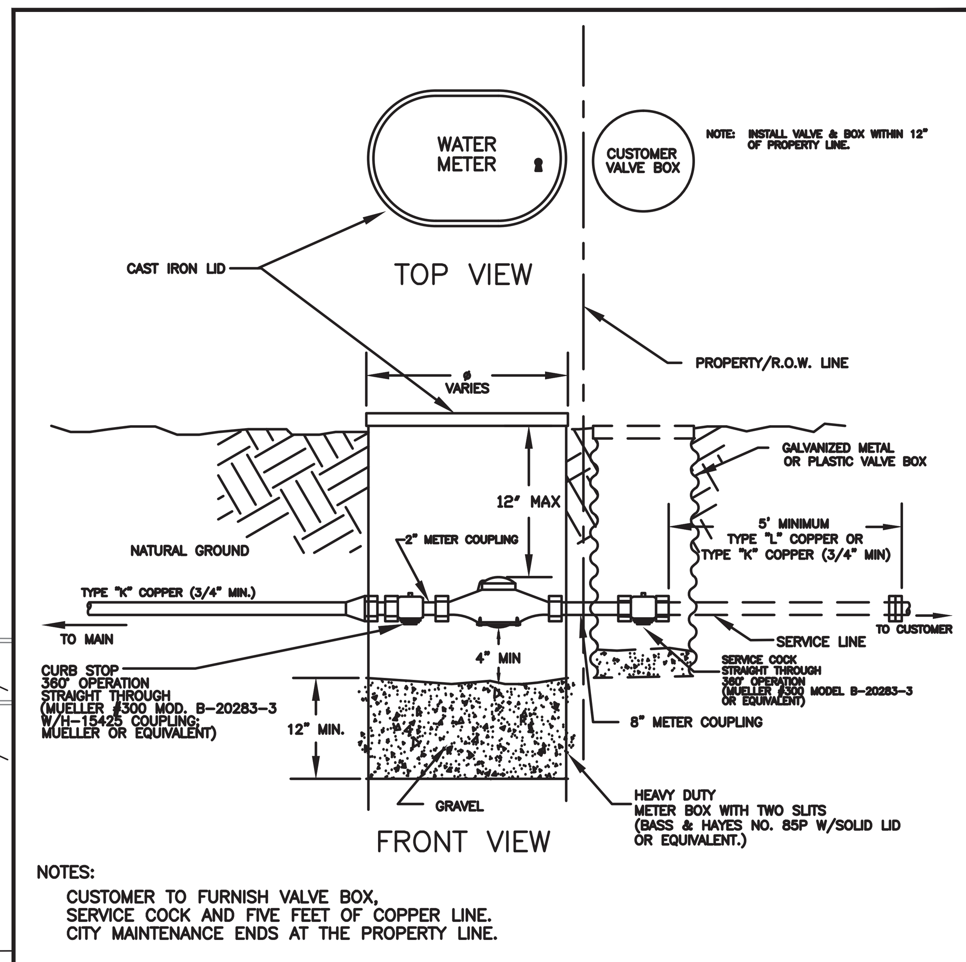

NOTES:
CUSTOMER TO FURNISH VALVE BOX, SERVICE COCK AND FIVE FEET OF COPPER LINE. CITY MAINTENANCE ENDS AT THE PROPERTY LINE.

CURB STOPS:
JONES J1900W
FIPT THREADS BOTH ENDS
360° ROTATION.

MULLER #300 MODEL B-20283-3
FIPT THREADS BOTH ENDS
360° ROTATION.

FORD MODEL B11-777WR
FIPT THREADS BOTH ENDS
360° ROTATION.

STANDARD METER		
Greenville	CITY OF GREENVILLE PUBLIC WORKS DEPARTMENT	
DRAWN: K. Colbert	SCALE: NTS	
DATE DRAWN: 5-9-01	DATE REVISED: 8-15-07	DRAWING NO. 26002

DETAIL OF PRECAST MANHOLE ASTM C478

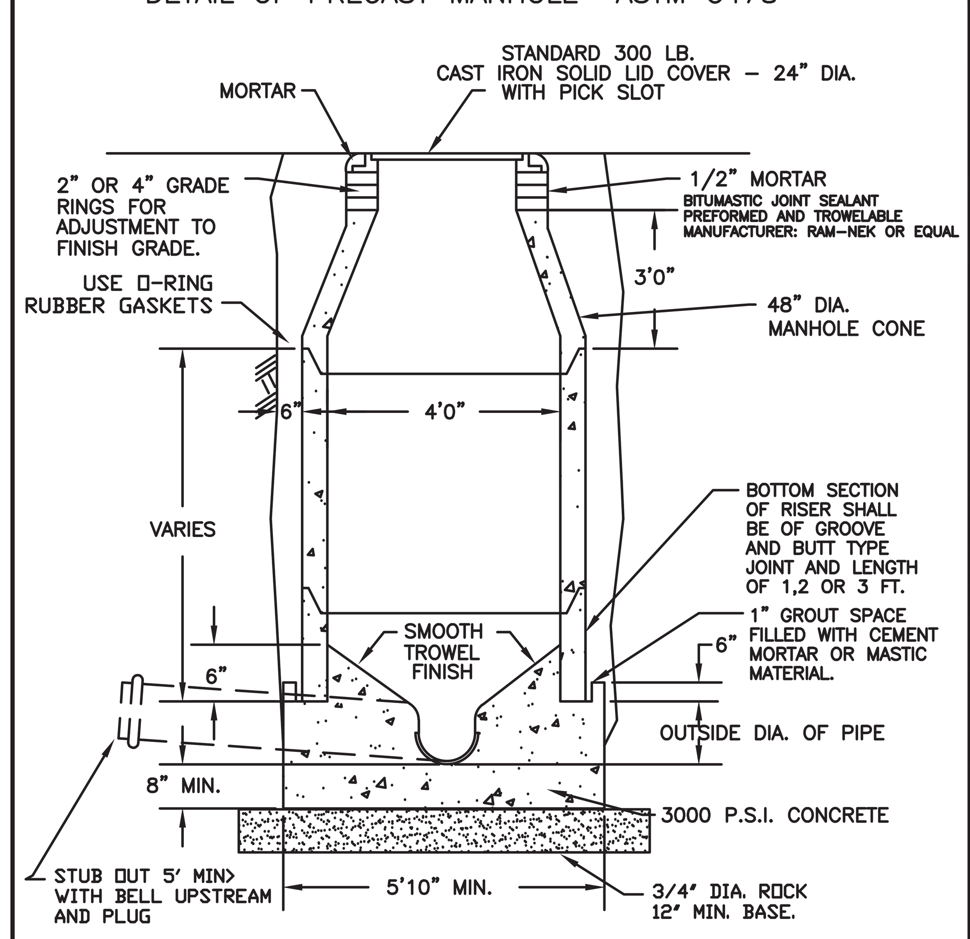

NOTE: MANHOLE RISERS CAN BE FROM ASTM C76 CLASS III R.C.P.

EXTERIOR SURFACE COAT KOPPERS "BITUMASTIC SUPER SERVICE BLACK" TNEMEC "46-450 HEAVY TNEMECOL" OR EQUAL 14 MILS DRY

PRECAST MANHOLE		
Greenville	CITY OF GREENVILLE PUBLIC WORKS DEPARTMENT	
DRAWN: K. Colbert	SCALE: NTS	
DATE DRAWN: 2-14-01	DATE REVISED: 8-15-07	DRAWING NO. 27004

THE CONTRACTOR SHALL FIELD VERIFY THE HORIZONTAL AND VERTICAL LOCATIONS OF ALL EXISTING PUBLIC AND PRIVATE UTILITIES THAT HAVE OR MAY HAVE ANY EFFECT ON THE PROPOSED IMPROVEMENTS BEFORE ANY WORK COMMENCES. THE INSTALLATION OF ALL GRAVITY FLOW PIPES SHALL BEGIN AT THE OUTFALL OR CONNECTION TO THE EXISTING SYSTEM AND PROCEED UPSTREAM. IF ANY DISCREPANCY FROM THE PLAN IS FOUND, THE CONTRACTOR IS TO NOTIFY TERRA ASSOCIATES, INC. BEFORE PROCEEDING FURTHER.

THE CONTRACTOR IS SPECIFICALLY CAUTIONED THAT THE LOCATION AND ELEVATION OF ALL UTILITIES AS SHOWN ON THESE PLANS ARE BASED UPON RECORDS OF THE VARIOUS UTILITY COMPANIES. EXACT ELEVATION AND FIELD LOCATION OF UTILITIES AS LABELED N.F.V. (NOT FIELD VERIFIED) MAY VARY BASED UPON INSTALLATION OF UTILITIES. IT IS THE RESPONSIBILITY OF THE CONTRACTOR TO RELOCATE ALL EXISTING UTILITIES THAT CONFLICT WITH THE PROPOSED IMPROVEMENTS SHOWN ON THESE PLANS.

ALL MATERIALS AND METHODS SHALL MEET THE CITY OF GREENVILLE STANDARDS AND SPECIFICATIONS.

CONTRACTOR TO INCLUDE IN HIS BID PRICE ALL FEES ASSOCIATED WITH WATER AND SEWER TAPPING, CONNECTION, AND INSPECTIONS.

LEGEND (PROPOSED)

Symbol	Description
□	PROPOSED WATER METER
△	PROPOSED REDUCER
	PROPOSED CLEANOUT
	PROPOSED SANITARY SEWER
	PROPOSED WATER LINE
	PROPOSED GAS LINE
UGE	PROPOSED UNDERGROUND ELECTRIC
UGT	PROPOSED UNDERGROUND TELEPHONE/CABLE

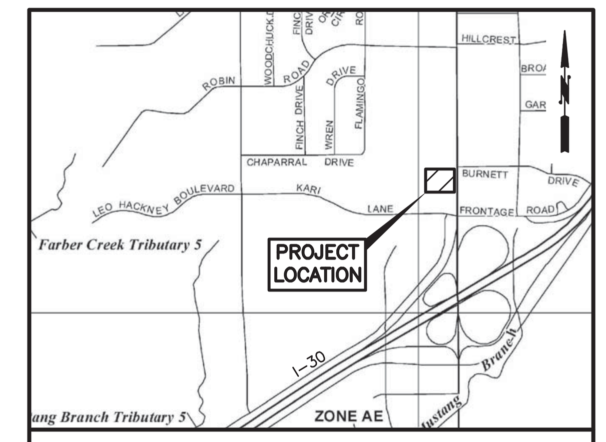

PROJECT LOCATION MAP: N.T.S.

FLOODPLAIN INFORMATION :

THIS TRACT LIES IN ZONE "X" (UNSHADED), DEFINED AS AREAS DETERMINED TO BE OUTSIDE THE 0.2% ANNUAL CHANCE FLOODPLAIN (OUTSIDE THE 100-YEAR AND THE 500-YEAR FLOODPLAIN) ACCORDING TO THE NATIONAL FLOOD INSURANCE PROGRAM FIRM, MAP NUMBER 48231C0380G, COMMUNITY PANEL NUMBER 485473 0380G, LATEST AVAILABLE PUBLISHED REVISION, DATED JANUARY 6, 2012.

BENCHMARK NOTE :

ELEVATIONS SHOWN HEREON ARE BASED ON SITE BENCHMARK "X" CUT ON CONCRETE CURB OF PARKING ISLAND LOCATED IN THE CENTER OF PARKING LOT OF SHOPPING MALL APPROX. 12' N.E. OF FLAG POLE (DENOTED AS TBM #1 ON TOPO BY COTTON SURVEYING COMPANY DATED MAY 2009).

SITE BENCHMARK:
ELEV. = 556.60'

PROJECT BENCHMARK:
BOX CUT ON TOP OF CURB.
ELEV. = 554.93

LEGAL DESCRIPTION :

A PORTION OF CROSSROADS GREENVILLE PROPERTIES, LTD. (CALLED 0.858 ACRES) VOL. 652, PG. 552 D.R.H.C.T.

PROPERTY ADDRESS

6906 WESLEY STREET
GREENVILLE, TEXAS 75401

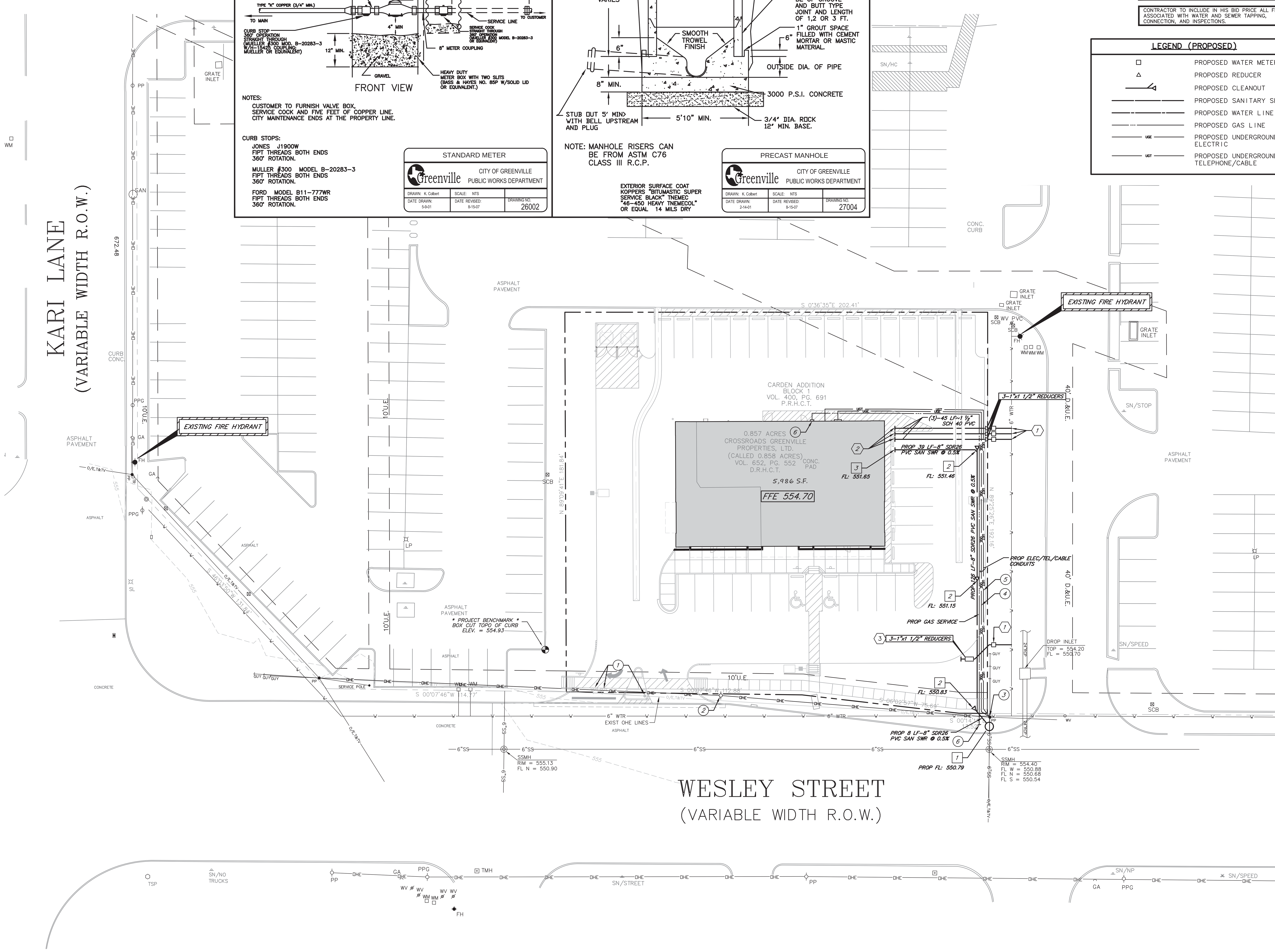

SEE SHEET C2 FOR GENERAL NOTES AND UTILITY NOTES

WATER NOTES:

1. CONTRACTOR TO COORDINATE WITH THE CITY OF GREENVILLE PUBLIC WORKS TO INSTALL 1" SERVICE CONNECTIONS AND 1" METERS. METERS ARE TO BE PLACED WITHIN 40' UTILITY ESMT AND INSTALLED PER CITY DETAIL ON THIS SHEET. METER BOXES ARE TO BE LABELED WITH THE ADDRESS OF EACH TENANT OR "IRRIGATION" ON THE BRASS TAG, STAMPED AND ATTACHED ON THE METER BOX (NOT ON LID).
2. STUB 5' FROM BUILDING WITH 1 1/2" DOMESTIC SCH 40 PVC WATERLINE AND PLUG & CLAMP. SEE PLUMBING PLANS FOR CONTINUATION, VERIFY EXACT LOCATION.
3. CONTRACTOR TO COORDINATE WITH THE CITY OF GREENVILLE PUBLIC WORKS TO INSTALL 1" BACKFLOW PREVENTION DEVICE ON IRRIGATION SERVICE LINE. DEVICE IS TO BE PLACED IN A FREEZE PROOF AND THEFT PROOF ENCLOSURE LOCATED OUTSIDE OF UTILITY ESMT WITHIN PRIVATE PROPERTY. PROVIDE 1" SCH 40 PVC STUB (PLUG & CLAMP) FOR IRRIGATION PURPOSES. SEE IRRIGATION PLANS FOR CONTINUATION. REFER TO DETAIL ON SHEET C9.

SEWER NOTES:

1. CONTRACTOR TO LOCATE EXISTING 6" SANITARY SEWER STUB AND MAKE CONNECTION TO PROPOSED SANITARY SEWER MANHOLE AS SHOWN HEREON. PRIOR TO CONNECTION, CONTRACTOR IS TO VERIFY FLOWLINE OF EXISTING 6" SANITARY SEWER LINE. IF CONFLICT EXISTS, CONTACT ENGINEER IMMEDIATELY. REFER TO CITY DETAIL ON THIS SHEET.
2. INSTALL 4" CLEANOUT TO GRADE. ALL CLEANOUTS IN PAVEMENT AREA TO BE TRAFFIC DUTY. REFER TO DETAIL ON SHEET C9.
3. STUB 5' FROM BUILDING WITH 8" LINE AND 8" PLUG. SEE PLUMBING PLANS FOR CONTINUATION, VERIFY EXACT LOCATION. REFER TO MEP PLANS FOR SUMP PUMP REQUIREMENTS.

DRY UTILITY NOTES:

1. EXISTING POWER POLE AND GUY WIRES IN CONFLICT WITH PROPOSED DRIVEWAY LOCATION. CONTRACTOR TO COORDINATE WITH LOCAL UTILITY COMPANY TO RELOCATE EXISTING POWER POLE.
2. PROPOSED POWER POLE LOCATION. COORDINATE EXACT LOCATION WITH LOCAL UTILITY COMPANY.
3. CONTRACTOR TO COORDINATE WITH LOCAL UTILITY COMPANY TO INSTALL POLE MOUNTED TRANSFORMER ON EXISTING POWER POLE (COORDINATE WITH MEP PLANS AND LOCAL UTILITY COMPANY FOR EXACT SIZE OF TRANSFORMER). INSTALL SERVICE DROP CONDUITS FOR UNDERGROUND ELECTRIC & TELEPHONE/CABLE SERVICES.
4. INSTALL:
   2-4" SCH 40 PVC SLEEVES WITH PULL STRINGS FROM PROPOSED SERVICE DROP TO HOUSE PANEL FOR UNDERGROUND ELECTRICAL SERVICE. COORDINATE WITH MEP PLANS AND LOCAL UTILITY COMPANY FOR EXACT SIZE OF CONDUITS PRIOR TO INSTALLATION.
5. INSTALL:
   2-4" SCH 40 PVC SLEEVES WITH PULL STRINGS FOR UNDERGROUND TELEPHONE/CABLE SERVICE. COORDINATE WITH MEP PLANS AND LOCAL UTILITY COMPANYS FOR EXACT SIZE OF CONDUITS PRIOR TO INSTALLATION.
6. CONTRACTOR TO COORDINATE WITH LOCAL UTILITY COMPANY FOR PROPOSED GAS SERVICE AND METER INSTALLATION (CONFIRM SIZE WITH MEP PLANS AND UTILITY COMPANY). REFER TO MEP PLANS FOR CONTINUATION.

TEXAS ONE CALL SYSTEM 1-800-245-4545 STOP-CALL BEFORE YOU DIG!

SANITARY SEWER GRADES	
PIPE SIZE	MIN. GRADE
4"	1.00%
6"	0.70%
8"	0.50%

ALL SANITARY SEWER PIPE TO BE PVC AT GRADES IN THE ABOVE TABLE UNLESS OTHERWISE NOTED.

TERRA ASSOCIATES, INC.
CONSULTING ENGINEERS
404 E. RAMSEY RD., STE. 104
SAN ANTONIO, TEXAS 78216
PHONE: 210-298-1600
EMAIL: BOS@terraassoc.com
TBPE Registration No.: F-003832

A1 ADDENDUM NO. 1 05/12/16

WINDLE + VOLPE ARCHITECTS
7600 SAN FELIPE HOUSTON, TEXAS 77063 PH 713-255-1390

STATE OF TEXAS WILLIAM O. SCHOCK 88636 LICENSED PROFESSIONAL ENGINEER

THE SEAL APPEARING ON THIS DOCUMENT WAS AUTHORIZED BY WILLIAM O. SCHOCK, P.E. 88636 ON Oct 20, 2016

PAD BUILDING AT THE CROSSROADS MALL
GREENVILLE, TEXAS

GREENVILLE PROPERTIES LTD.
GREENVILLE, TEXAS

DATE	4/15/16
PROJECT NO.	08-14-05
DRAWN BY	JCM

SITE UTILITY PLAN

C5

COPYRIGHT © 2015 WINDLE + VOLPE Architects

F:\Clients\2911-Windle -Volpe Architects\S-2911-1501 Lease Bulidng, Greenville, TX\Drawings\C5-Util.dwg Oct 20, 2016-12:59pm Terra Associates Inc., WAH