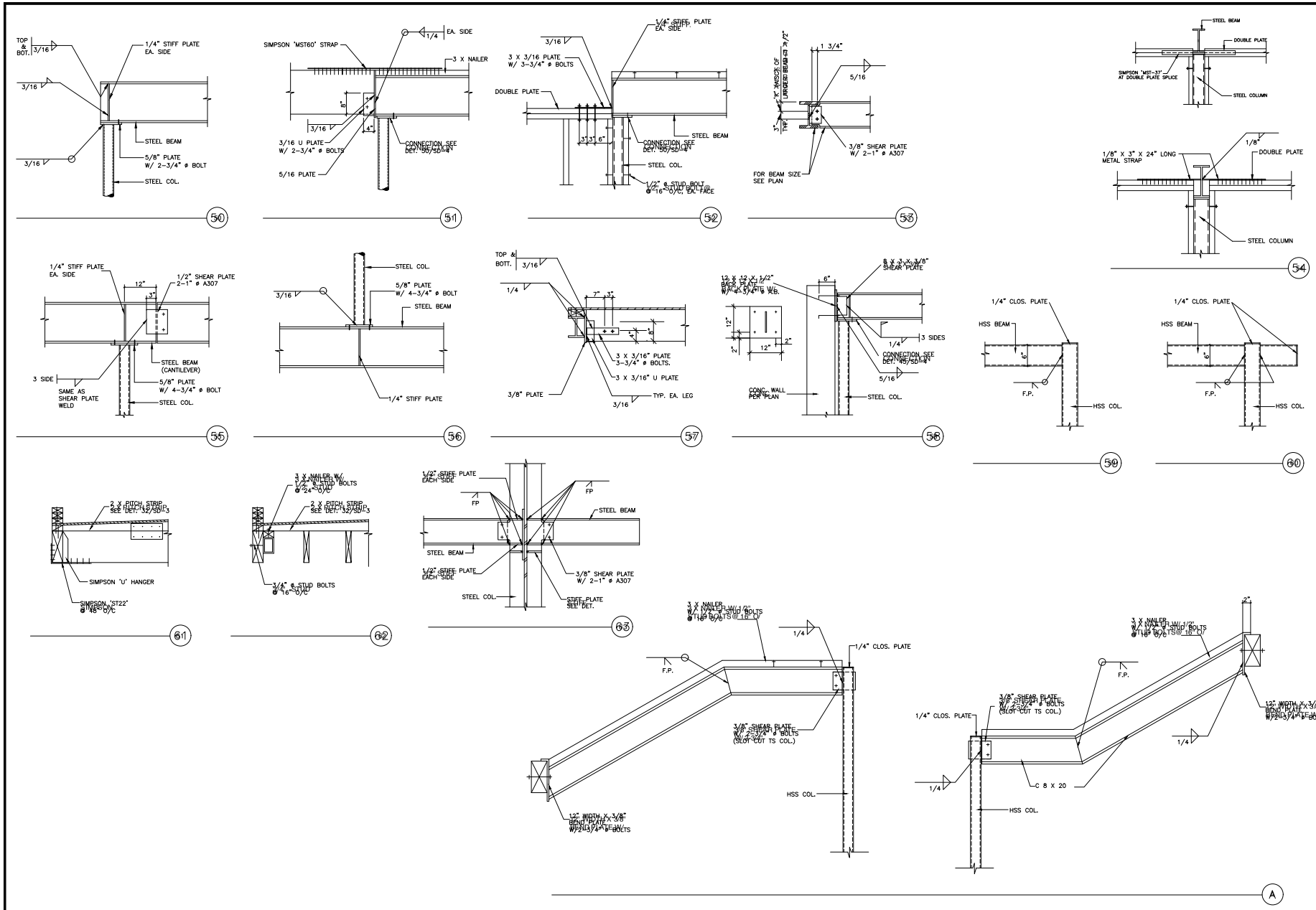

REVISION	BY
8-5-2016	

SINGLE FAMILY RESIDENCE
633 N. CRESCENT DR.
LOS ANGELES, CA

BERKOZ & ASSOCIATES, INC.
CONSULTING STRUCTURAL ENGINEERS
5530 CORBIN AVENUE, SUITE 355
TARZANA, CA 91356
(818) 668-8596 FAX (818) 668-8596

REGISTERED PROFESSIONAL ENGINEER
STRUCTURAL
STATE OF CALIFORNIA

DATE 6-15-2016

JOB #

STRUCTURAL

SD-4