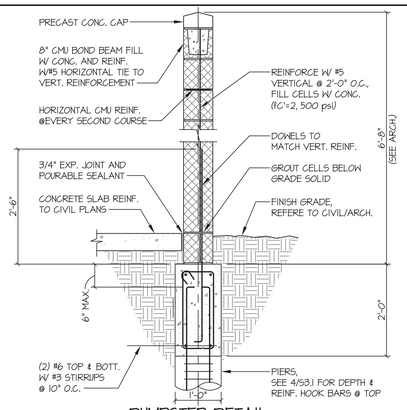

DUMPSTER DETAIL

SCALE: 3/4" = 1'-0" 8

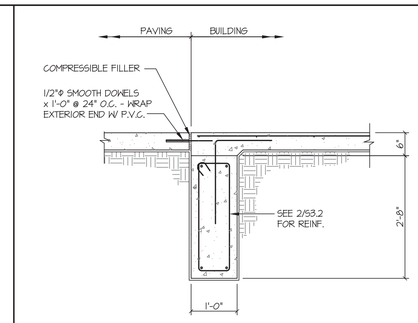

TYPICAL DETAIL
EXTERIOR GRADE BEAM
AT DOORS/FLATWORK

SCALE : 3/4" = 1'-0" 4

NO SCALE 20

NO SCALE 16

NO SCALE 12

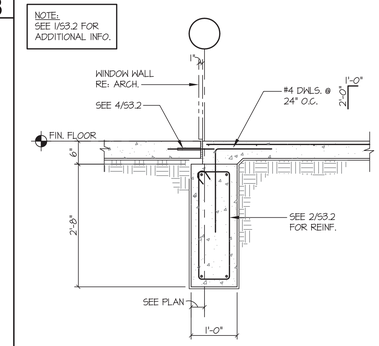

TYPICAL DETAIL
EXTERIOR GRADE BEAM
AT WINDOW WALL

SCALE : 3/4" = 1'-0" 3

SCALE : 3/4" = 1'-0" 19

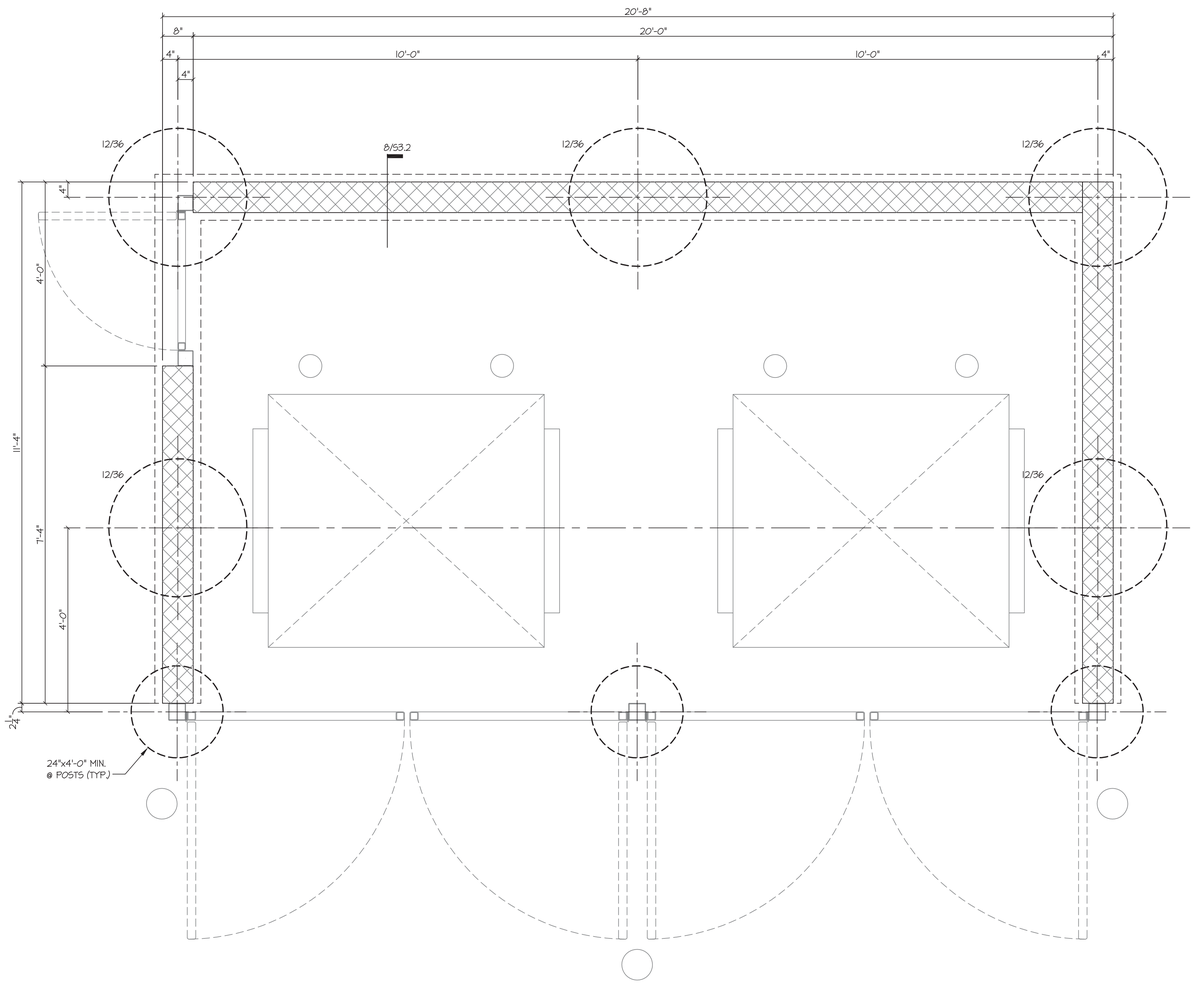

1 DUMPSTER FOUNDATION PLAN

SCALE: 3/4" = 1'-0"

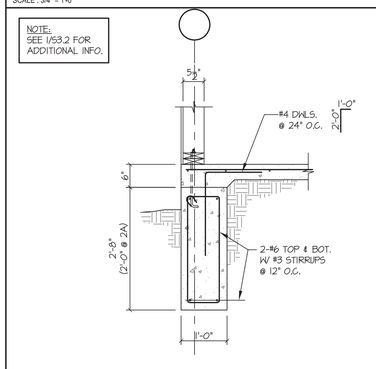

SCALE : 3/4" = 1'-0" (2A NOTED) 2

SCALE : 3/4" = 1'-0" 18

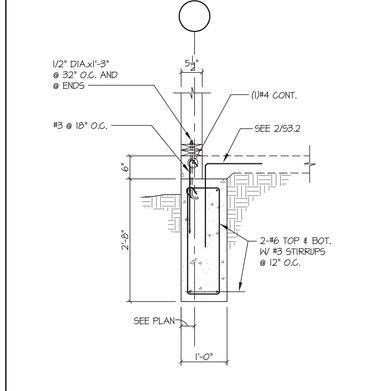

SCALE : 3/4" = 1'-0" 1

SCALE : 3/4" = 1'-0" 17

SCALE : 3/4" = 1'-0" 5

PROGRESS	02-09-2015
PERMIT	02-12-2015

WINDLE + VOLPE
ARCHITECTS
7600 SAN FELIPE HOUSTON, TEXAS 77063 PH 713-955-1390

Matrix Structural Engineers
TBPE Firm Registration No. F-2640

STATE OF TEXAS
MOYEENUL HAQUE
72876
LICENSED
PROFESSIONAL ENGINEER
02-12-15

PAD BUILDING AT THE
CROSSROADS MALL
GREENVILLE, TEXAS

GREENVILLE PROPERTIES LTD.
GREENVILLE, TEXAS

DATE	1/26/15
PROJECT NO.	08-14-05
DRAWN BY	BN

FOUNDATION DETAILS

S3.2

mse15013

29 OF 36

COPYRIGHT © 2015 WINDLE + VOLPE Architects