PANEL 'LA1'

LOCATION: STORAGE AREA

120/208V.,3PH.,4W.
400 AMP MCB

MOUNTING: SURFACE
NEMA–1
10 K ISCA
FEED THROUGH LUGS

NOTE	CKT	LOAD	KVA	WIRE	BKR	BKR	WIRE	KVA	LOAD	CKT	NOTE
(2)	1	SALES FLOOR LTS	1.2	#10	20/1	20/1	#10	1.35	SALES FLOOR LTS	2	(2)
(2)	3	SALES FLOOR LTS	1.2	#10	20/1	20/1	#10	1.05	SALES FLOOR LTS	4	(2)
(2)	5	SALES FLOOR LTS	1.05	#10	20/1	20/1	#10	1.35	SALES FLOOR LTS	6	(2)
(2)	7	WALL SCONCE	0.9	#10	20/1	20/1	#12	.75	FITTING ROOM LTS	8	
(2)	9	SUSP CEILING ELEM	1.5	#10	20/1	20/1	#10	1.2	TRACK LIGHTS	10	(2)
(2)	11	TRACK LIGHTS	1.5	#10	20/1	20/1	#10	1.5	TRACK LIGHTS	12	(2)
(2)	13	TRACK LIGHTS	1.2	#10	20/1	20/1	#10	0.9	TRACK LIGHTS	14	(2)
(2)	15	TRACK LIGHTS	1.2	#10	20/1	20/1	#10	1.25	BACK ROOM LTS	16	
(2)	17	TRACK LIGHTS	0.9	#10	20/1	20/1	#10	1.4	TRACK LIGHTS	18	(2)
(2)	19	TRACK LIGHTS	1.2	#10	20/1	20/1	#10	1.4	TELEPHONE BOARD	20	
(2)	21	SALES FLOOR LTS	1.2	#10	20/1	20/1	#10	1.2	TRACK LIGHTS	22	(2)
(1)	23	SIGNAGE	1.2	#10	20/1	20/1	#10	1.5	TRACK LIGHTS	24	(2)
(1)	25	SIGNAGE	1.2	#10	20/1	20/1	#10	1.2	SIGNAGE	26	(1)
	27	RTU–1	5.9	#8	50/3	20/1	#10	1.2	SIGNAGE	28	(1)
	29	–––	5.9			20/1	#12	0.5	SECURITY	30	
	31	–––	5.9			20/2	#12	1.0	WH	32	
	33	RTU–2	5.9	#8	50/3			1.0	–––	34	
	35	–––	5.9			20/1	#10	0.4	CASH WRAP	36	(3)
	37	–––	5.9			20/1	#10	0.4	CASH WRAP	38	(3)
	39	ROOF TOP RECEPTACLE	.36	#10	20/1	20/1	#12	0.36	MUZAK EQUIPMENT	40	
(3)	41	EMERG WALL PKS & EXT	0.6	#10	20/1	20/1	#12	.03	EGRESS LTS	42	(3)

TOTAL KVA = SEE SECTION 2

NOTE:
LOCATE LIGHTING CONTACTORS IN STOCK ROOM ADJACENT TO ELECTRICAL PANELS.

(SECTION–2)

PANEL 'LA1'

LOCATION: STORAGE AREA

120/208V.,3PH.,4W.
400 AMP MLO

MOUNTING: SURFACE
NEMA–1
10 K ISCA

NOTE	CKT	LOAD	KVA	WIRE	BKR	BKR	WIRE	KVA	LOAD	CKT	NOTE
(3)	43	SECURITY	1.2	#10	20/1	20/1	#10	1.5	SENSORMATIC SYSTEM	44	(3)
	45	RECEPTACLES	1.1	#10	20/1	20/1	#10	1.1	STORAGE RM RECEPT.	46	
	47	RECEPTACLES	1.1	#10	20/1	20/1	#12	.36	RECEPTACLES	48	
	49	LTG CTL CAB	0.5	#12	20/1	20/1	#12	.36	RECEPTACLES	50	
	51	SECURITY	0.5	#12	20/1	20/1	#12	0.2	EF–2	52	
	53	BUZZER	0.5	#12	20/1	20/1	#12	.54	RECEPTACLES	54	
	55	SECURITY CAMERA	1.0	#12	20/1	20/1	#12	0.8	EWC	56	(4)
	57	SECURITY CAMERA	1.0	#12	20/1	20/1	#10	0.45	TRACK LIGHTS	58	
	59	DUCT SMOKE DETECTOR	0.5	#10	20/1	20/1	#12	0.5	DATA RACK	60	(3)
	61	RECEPTACLE	0.2	#12	20/1	20/1	#12	0.2	EF–1	62	
	63	EUH	1.5	#12	20/2	20/1	–	–	SPARE	64	
	65	––	1.5			20/1	–	–	SPARE	66	
	67	SPARE	–	–	20/1	20/1	–	–	SPARE	68	
	69	SPARE	–	–	20/1	20/1	–	–	SPARE	70	
	71	SPARE	–	–	20/1	20/1	–	–	SPARE	72	
	73	SPARE	–	–	20/1	20/1	–	–	SPARE	74	
	75	SPARE	–	–	20/1	–	–	–	SPACE	76	
	77	SPACE	–	–	–	–	–	–	SPACE	78	
	79	SPACE	–	–	–	–	–	–	SPACE	80	
	81	SPACE	–	–	–	–	–	–	SPACE	82	
(3)	83	NIGHT LIGHTS	1.0	#12	20/1	–	–	–	SPACE	84	

CONTINUOUS (LTG.) LOAD x 1.25 = 37.9 KVA
MISC. LOAD x 1.0 = 55.6 KVA
TOTAL KVA = 93.5 KVA

1. ROUTE CIRCUIT THRU TIME CLOCK.
2. TO BE CONTROLLED THRU LIGHTING CONTACTORS.
3. PROVIDE LOCK ON DEVICE.
4. PROVIDE GFCI CIRCUIT BREAKER.

SYMBOL LEGEND

SYMBOL	DESCRIPTION (DISREGARD ITEMS NOT SHOWN ON PLANS)
LIGHTING (LETTER DENOTES TYPE – SEE LIGHT FIXTURE SCHEDULE)	
	DOWNLIGHT FIXTURE
	LIGHT FIXTURE – WALL MOUNTED
RECEPTACLES AND OUTLETS	
	DUPLEX RECEPTACLE
	DUPLEX GROUND FAULT CIRCUIT INTERRUPTER RECEPTACLE
	DOUBLE DUPLEX GROUND FAULT CIRCUIT INTERRUPTER RECEPTACLE IN 2–GANG BOX WITH SINGLE COVER PLATE
	JUNCTION BOX
MOTOR CONTROLLERS AND EQUIPMENT	
	DISCONNECT SWITCH
ELECTRICAL EQUIPMENT	
	277/480V PANELBOARD
	120/208V PANELBOARD
	TELEPHONE CABINET
CIRCUITING	
	CONDUIT
	CONDUIT BELOW FLOOR, SLAB, OR GRADE
	3/4"C. UNLESS OTHERWISE NOTED; LONG HATCH = NEUTRAL; SHORT HATCH = PHASE; "Z" HATCH = INSULATED GROUND, NO HATCHES INDICATES 2 CONDUCTORS, ARROW INDICATES HOMERUN
	PARTIAL ELECTRICAL HOMERUN
SUBSCRIPTS AND ABBREVIATIONS	
WP	INDICATES WEATHERPROOF
NL	LIGHT FIXTURE ON NIGHT LIGHT CIRCUIT

GENERAL NOTE:
ALL EXTERIOR BUILDING ELECTRICAL EQUIPMENT TO BE WEATHERPROOF NEMA–3R MINIMUM.

SPECIFICATIONS

GENERAL

* VERIFY ALL DIMENSIONS AT THE JOB SITE AND FROM THE ARCHITECTURAL PLANS.
* UNLESS OTHERWISE NOTED, CONTRACTOR AND SUBCONTRACTOR SHALL PAY FOR ALL PERMITS AND CHARGES REQUIRED AND SHALL COMPLY WITH ALL GOVERNING CODES AND ORDINANCES AND AUTHORITY HAVING JURISDICTION.
* VISITING THE SITE: EACH BIDDER SHALL VISIT THE SITE OF THE PROPOSED WORK AND SHALL FULLY INFORM HIMSELF REGARDING THE FACILITIES. NO ADDITIONAL COMPENSATION WILL BE ALLOWED FOR WORK OR MATERIAL OMITTED FROM THE BIDDER'S CONTRACT PROPOSAL DUE TO HIS FAILURE TO SO INFORM HIMSELF BY SUCH INVESTIGATION.
* ALL CHANNELING AND PATCHING OF ROOF, FLOOR, CEILING AND WALLS SHALL BE GENERAL CONTRACTOR.
* FURNISH AND INSTALL A COMPLETE ELECTRICAL SYSTEM AS INDICATED ON PLANS. ELECTRICAL CONTRACTOR TO MAKE ALL FINAL CONNECTIONS TO ALL EQUIPMENT. MATERIAL SHALL BE AS FOLLOWS:

CONDUIT:

* ALL ELECTRICAL CONDUCTORS SHALL BE INSTALLED IN CONDUIT COMPLYING WITH THE NATIONAL ELECTRICAL CODE. WHERE INSTALLED SUBJECT TO STRESS FROM COLLISION OR IMPACT, CONDUIT SHALL BE GALVANIZED RIGID STEEL. WHERE RIGID STEEL CONDUIT IS NOT REQUIRED, CONDUCTORS SHALL BE INSTALLED IN ELECTRICAL METALLIC TUBING WITH ELECTRO–GALVANIZING OUTSIDE AND ENAMEL INSIDE. TUBING SHALL BE BY "TRIANGLE" OR AN APPROVED SUBSTITUTION. LIQUID–TIGHT FLEXIBLE METAL CONDUIT SHALL BE USED AT ALL MOTOR CONNECTIONS OR WHERE MOVEMENT OR VIBRATION IS A CONCERN. UNLESS NOTED OTHERWISE, FLEXIBLE METAL CONDUIT MAY BE USED ONLY FOR CONNECTION TO LIGHTING FIXTURES, IN LENGTHS NOT TO EXCEED 6 (SIX) FEET. MINIMUM CONDUIT SIZE SHALL BE 1/2 INCH. MINIMUM SIZE FOR FLEXIBLE METAL CONDUIT SHALL BE 1/2 INCH. CONDUIT/CONDUCTOR FILL SHALL CONFIRM TO NATIONAL ELECTRICAL CODE, LATEST EDITION.
* CARLON PVC TYPE SCH. 40 HEAVY WALL CONDUIT WITH GROUND WIRE MAY BE USED BELOW FLOOR SLAB OR UNDERGROUND IN LIEU OF RIGID, THREADED, GALVANIZED CONDUIT. PVC SCH. 40 CONDUIT SHALL NOT BE RUN IN OR ABOVE FLOOR SLAB, OR IN TILT WALL PANELS. PVC CONDUIT SHALL TERMINATE BELOW FLOOR SLAB WITH RIGID, THREADED METAL CONDUIT ADAPTER. CONDUIT ABOVE SLAB SHALL BE METAL.
* A GROUND CONDUCTOR SHALL BE SUPPLIED IN NONMETALLIC CONDUIT OR ELECTRICAL METALLIC TUBING UTILIZING SET SCREW TYPE CONNECTORS. THE GROUND CONDUCTOR SHALL BE BARE, STRANDED, ANNEALED COPPER.
* CONDUIT TO BE SUPPORTED FROM JOIST. PROVIDED HANGERS, SUPPORTS AND FASTENINGS AS REQUIRED BY NATIONAL ELECTRICAL CODE DO NOT SUPPORT FROM ROOF DECK.
* PROVIDE PULL STRING IN ALL EMPTY CONDUITS.

CONDUIT FITTINGS:

* ALL CONDUIT FITTINGS SHALL BE STEEL, SET SCREW OR COMPRESSION TYPE, INSULATED THROAT, UL LISTED. FITTINGS SHALL BE AS MANUFACTURED BY APPLETON ELECTRIC, OZ GEDNEY CO., ARROW CONDUIT AND FITTINGS CORP., OR EQUAL.

CONDUCTORS:

* ALL CONDUCTORS SHALL BE COPPER. EACH CONDUCTOR SHALL BE CONTINUOUS, WITHOUT WELD, SPLICE, OR JOIST THROUGHOUT ITS LENGTH, AND UNIFORM IN CROSS–SECTION. WIRE #6 AWG AND LARGER SHALL HAVE TYPE "THWN" INSULATION. WIRE #8 AWG AND SMALLER SHALL HAVE DUAL–RATED TYPE "THHN/THWN" INSULATION. MINIMUM WIRE SIZE, EXCEPT FOR CONTROL WIRING, SHALL BE #12 AWG. ALL WIRING INSIDE LIGHTING FIXTURES SHALL BE TEMPERATURE RATED PER THE NATIONAL ELECTRICAL CODE – 90 DEGREES C MINIMUM. BRANCH CIRCUIT WIRING WITHIN 3 INCHES OF FLUORESCENT BALLASTS SHALL BE TEMPERATURE RATED FOR 90 DEGREES C.

LIGHTING PANELBOARDS:

* 1. 120/208V, 3–PHASE, 4–WIRE OR 120/240V, 1–PHASE, 3–WIRE: FURNISH AND INSTALL AS SHOWN ON PLANS, LIGHTING PANEL BOARDS BY SQUARE 'D' TYPE 'NQOD', STYLE "Q", OR EQUAL WITH BOLT ON CIRCUIT BREAKERS OR AN APPROVED SUBSTITUTION. ALL BUSSING TO BE COPPER.
  2. 277/480V, 3–PHASE, 4–WIRE: FURNISH AND INSTALL AS SHOWN ON PLANS, LIGHTING PANELBOARDS BY SQUARE 'D', OR EQUAL TYPE "NEHB" WITH BOLT ON CIRCUIT BREAKERS OR AN APPROVED SUBSTITUTION. ALL BUSSING TO BE COPPER.

SAFETY SWITCHES:

* SAFETY SWITCHES SHALL BE FURNISHED AND INSTALLED AT ALL LOCATIONS INDICATED ON PLANS OR REQUIRED BY THE NATIONAL ELECTRICAL CODE. ALL SWITCHES SHALL BE HEAVY DUTY TYPE AND SHALL HAVE CLIPS FOR REJECTION TYPE FUSES AND SHALL BE BY SQUARE 'D', G.E., OR EQUAL, FOR THE VOLTAGE AND LOAD INVOLVED. PROVIDE A COMPLETE SET OF FUSES IN ALL FUSED SWITCHES. FUSES SHALL BE CLASS AK–1 (BUSSMAN "LOW–PEAK") FOR CIRCUITS UP TO 600 AMPS AND CLASS L (BUSSMAN "HI–CAP" KRP–C) FOR CIRCUITS ABOVE 600 AMPS.

LIGHTING FIXTURE SCHEDULE

TAG	LAMP	SYMBOL	TYPE	DESCRIPTION	NOTES
A	175w METAL HALIDE		Suspended Hi–Bays	HUBBELL LIGHTING– SUPER BAY PA2 SERIES BLA175P8WH–BLPA2–BLPKENC BOTTOM OF LENS AT 12'–0" AFF. PROVIDE NIGHT LIGHTS, SEE ELECTRICAL DRAWINGS	
A1	100w METAL HALIDE		Suspended Hi–Bays	JUNO LIGHTING–ACCULITE, SIMCOE GLASS REFLECTOR SC100PSG10 WITHOUT LOUVER. BOTTOM OF FIXTURE AT 12'–0" AFF	
B	(2) 32w T8		Strip Fluorescents	8' STRIP LIGHTING WITH ELECTRONIC BALLASTS. SUSPENDED AT 12'–0" AFF	
C	15w LED PAR 30		Track lights	HALO POWER TRAC LIGHTING SYSTEMS #L1730PX TRACKS & HEADS, WHITE. SUSPENDED FROM ABOVE AT 12'–0"	24 LINEAR FOOT OF TRACK PER EACH 20 AMP CIRCUIT MAXIMUM
D	23w CFL		Wall Mounted Street Lights	WALL SCONCES, INSTALL IN LOCATIONS SHOWN.	PAINT ALL EXPOSED SCREW HEADS BLACK, INSTALL AFTER INSTALLATION OF WALLCOVERING/FIXTURING
E	23w CFL		Lamp Post	FLOOR MOUNTED LAMP POST FIXTURE	PAINT ALL EXPOSED SCREW HEADS BLACK
F	50w TYPE–A		Combo Light/Fan	COMBINATION LIGHT AND EXHAUST FAN, COLOR: WHITE	
G	75W PAR30		Recessed Lights	RECESSED LIGHT, WHITE TRIM, SPECULAR REFLECTOR	
X	LED		Exit Sign	EXIT SIGN WITH BATTERY BACKUP	
Y	(2) ADJUSTABLE HEADS		Emergency Lights	EMERGENCY LIGHTING WITH BATTERY BACKUP, SUSPENDED FROM ABOVE AT 12'–0" AFF	
Y1	(2) ADJUSTABLE HEADS		Emergency Lights	WALL MOUNTED EMERGENCY LIGHTING WITH BATTERY BACKUP	

1. LANDLORD TO PROVIDE NEW 4100K LAMPS (VERIFY WITH GC IN FIELD EXACT STYLE/TYPE OF EXISTING LAMPS), TENANT GC TO INSTALL

2. CONTACT THE FOLLOWING DISTRIBUTOR TO OBTAIN APPROPRIATE PRICING FOR RUE 21 PROJECTS:

LIGHTING
CITY LIGHTING
KEVIN RAPE
800–257–2922 X321
412–366–7609 FAX

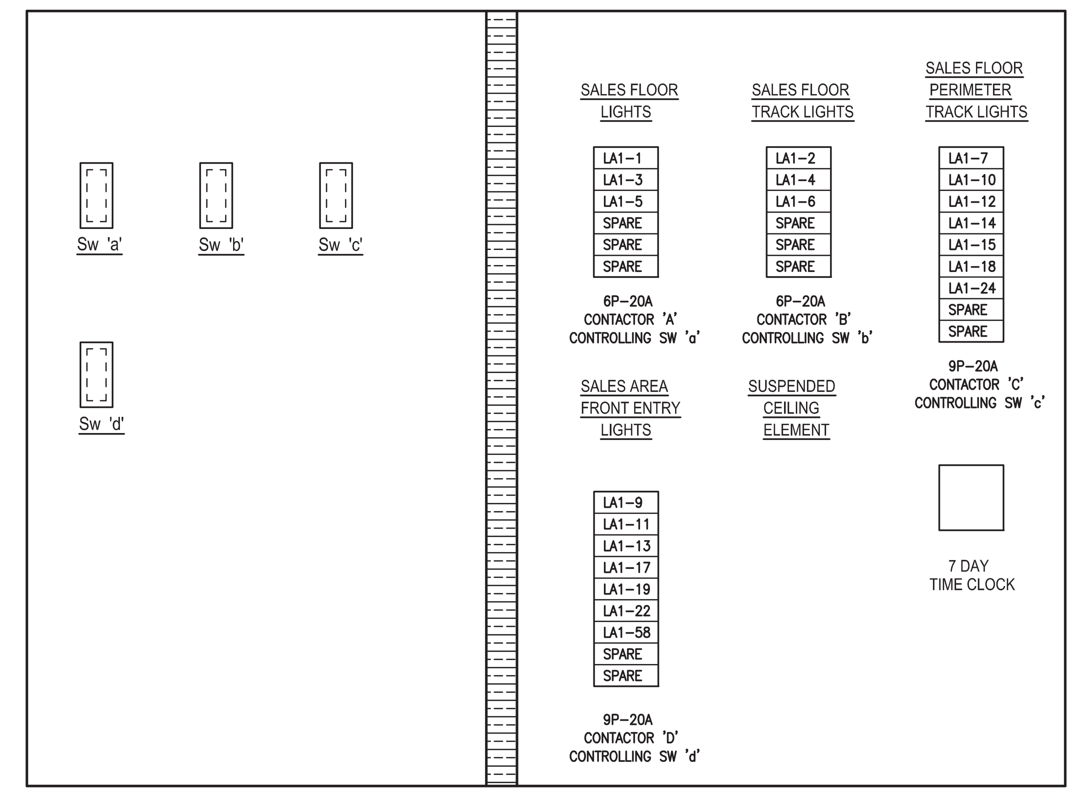

4 **LIGHTING CONTROL CABINET**
SCALE: NTS

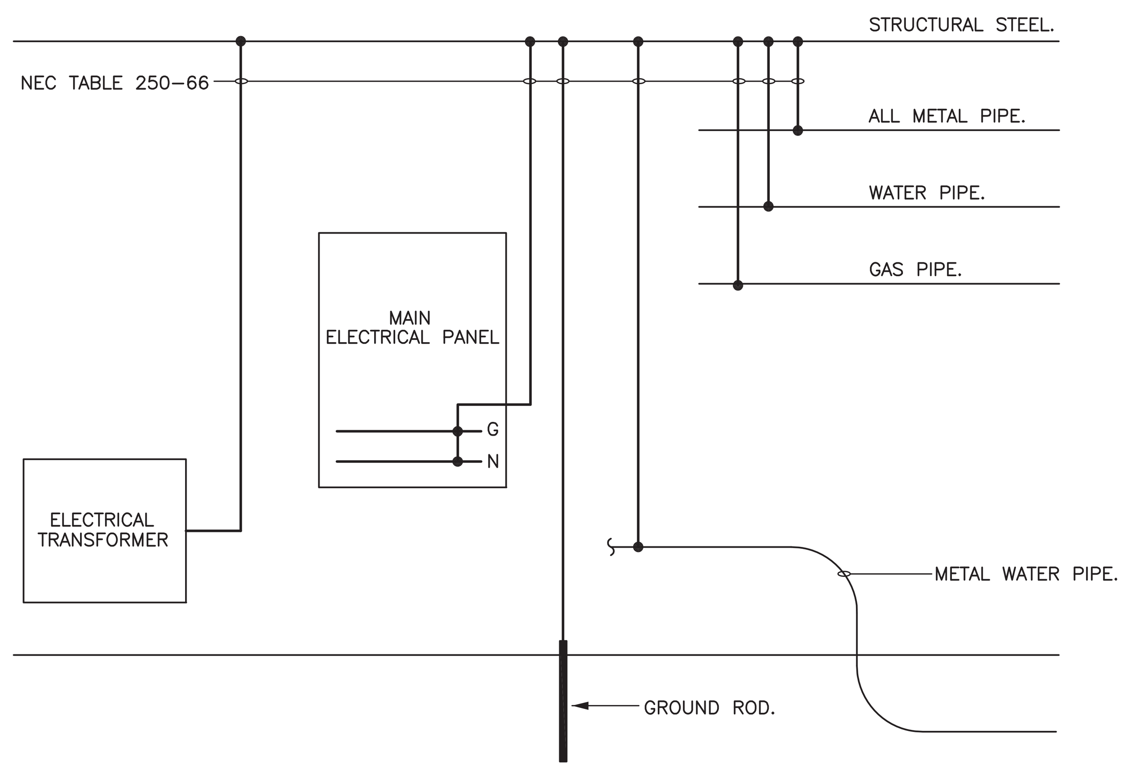

6 **TRANSFORMER GROUNDING DETAIL**
SCALE: NTS

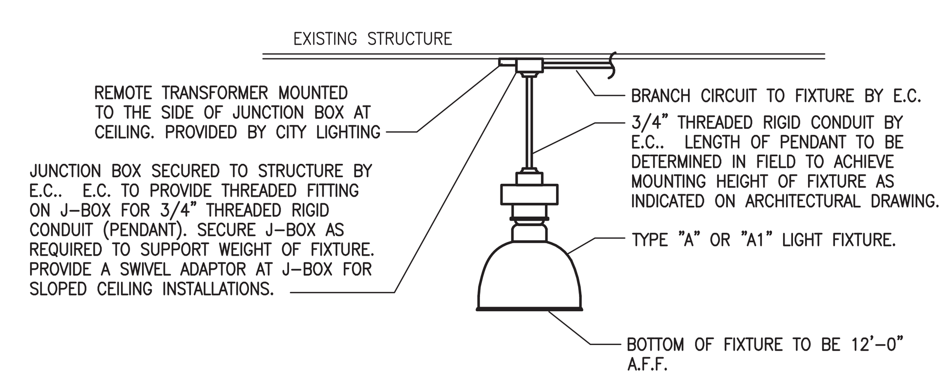

5 **HI-BAY MOUNTING DETAIL**
SCALE: NTS

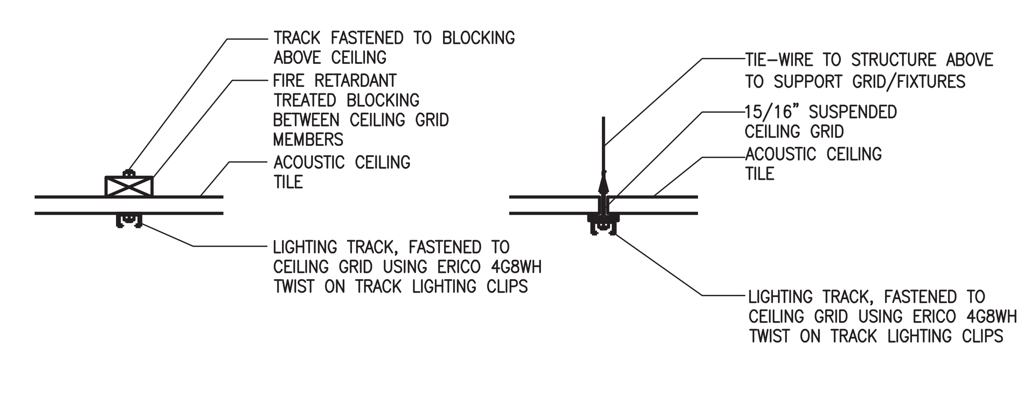

3 **TRACK LIGHTING MOUNTING DETAIL**
SCALE: NTS

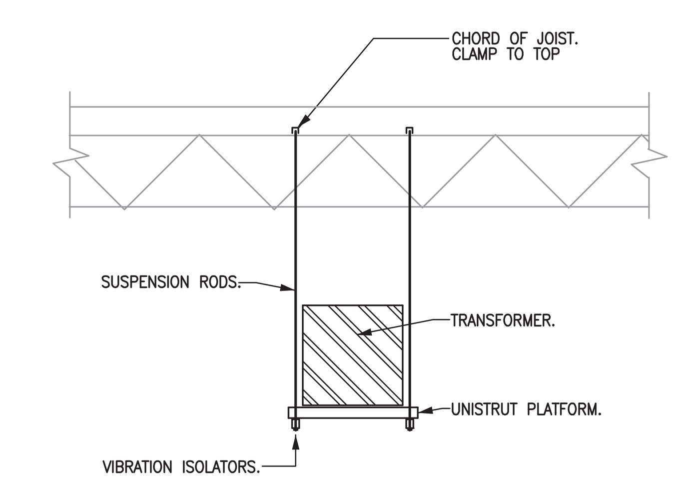

2 **TRANSFORMER MOUNTING**
SCALE: NTS

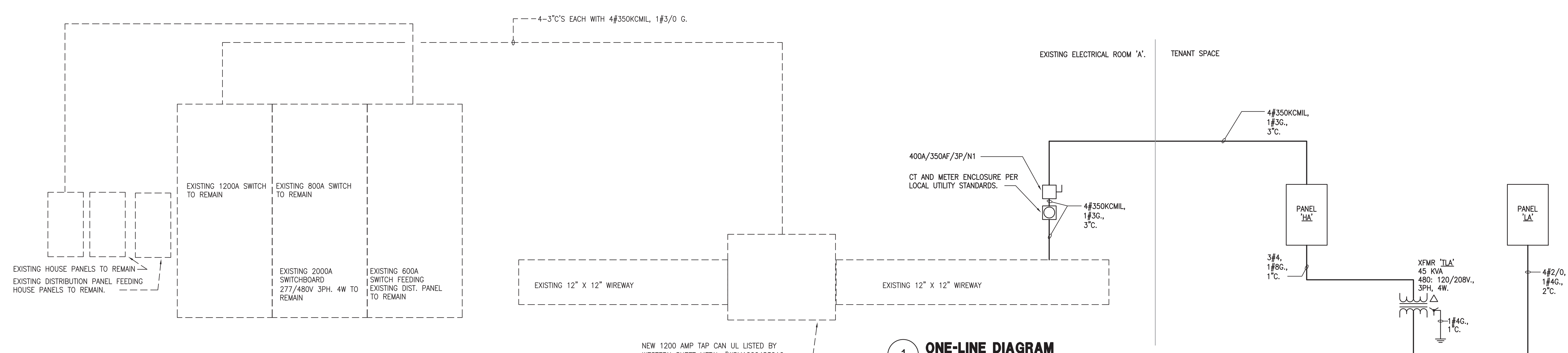

1 **ONE-LINE DIAGRAM**
SCALE: NTS

Hermes Architects
Members A.I.A.
1177 West Loop South, Ste 500
Houston, Texas 77027
Tel 713-785-3644
www.hermesarchitects.com

KME PROJECT # 03011011
KALMANS MARSHALL ENGINEERING, INC.
HOUSTON | DALLAS/FT. WORTH | BATON ROUGE
10930 W. Sam Houston Parkway N., Suite 900
Houston, Texas 77064 (281) 664–1900
REGISTRATION # F–4111

THIS DOCUMENT IS RELEASED FOR THE PURPOSE OF REVIEW UNDER THE AUTHORITY OF BRADLEY KALMANS, P.E. 80219 ON SEPTEMBER 2, 2011. IT IS NOT TO BE USED FOR CONSTRUCTION PURPOSES.

CROSSROADS MALL
RUE 21
6834 WESLEY STREET
GREENVILLE, TEXAS 75401

GREENVILLE PROPERTIES, LTD.
10850 WILCHIRE BLVD.
SUITE 1050
LOS ANGELES, CA 90024

Crossroads
GREENVILLE PROPERTIES LTD.

DATE	SEPTEMBER 2, 2011
PROJECT NO.	809501
DRAWN BY	
CHECKED BY	

ELECTRICAL SCHEDULES & DETAILS

E3.01

COPYRIGHT© 2011 Hermes Architects, Inc.